GENERAL PROJECT DATA

FOR IDENTIFICATION OF CONTRACTUAL AGREEMENTS, THIS SET OF DRAWINGS IS DATED X X X. ANY REVISIONS THEREAFTER WILL BE NOTED AND DATED ON THE AFFECTED DRAWIING(S).

PRIOR TO THE COMMENCEMENT OF ANY WORK, A PRECONSTRUCTION MEETING WITH THE CITY OF CLERMONT IS REQUIRED. THE CITY OF CLERMONT SHALL BE NOTIFIED PRIOR TO COMMENCEMENT OF MAJOR PHASES OF CONSTRUCTION.

THE LOCATIONS OF ALL EXISTING UTILITIES SHOWN ON THE PLANS HAVE BEEN DETERMINED FROM THE BEST INFORMATION AVAILABLE AND ARE GIVEN THE CONVENIENCE OF THE CONTRACTOR. THE ENGINEER ASSUMES NO RESPONSIBILITY FOR THEIR ACCURACY. PRIOR TO THE START OF ANY CONSTRUCTION ACTIVITY, IT SHALL BE THE CONTRACTOR'S RESPONSIBILITY TO NOTIFY THE VARIOUS UTILITIES AND TO MAKE THE NECESSARY ARRANGEMENTS FOR ANY RELOCATIONS TO THESE UTILITIES WITH THE OWNER OF THE UTILITY. THE CONTRACTOR SHALL EXERCISE CAUTION WHEN CROSSING AN UNDERGROUND UTILITY, WHETHER SHOWN ON THE PLAN OR LOCATED BY THE UTILITY COMPANY. ALL UTILITIES THAT INTERFERE WITH THE PROPOSED CONSTRUCTION SHALL BE RELOCATED BY THE RESPECTIVE UTILITY COMPANY AND THE CONTRACTOR SHALL COOPERATE WITH THEM DURING RELOCATION OPERATIONS. ANY DELAY OR INCONVENIENCE CAUSED TO THE CONTRACTOR BY THE RELOCATION OF VARIOUS UTILITIES SHALL BE INCIDENTAL TO THE CONTRACT AND NO EXTRA COMPENSATION WILL BE ALLOWED.

DRAINAGE SYSTEMS

THE CONTRACTOR SHALL PERFORM ALL WORK PERTAINING TO DRAINAGE INCLUDING EXCAVATION OF W.R.A. PRIOR TO THE COMMENCEMENT OF OTHER WORK INCLUDED IN THESE PLANS. THE DRAINAGE FACILITIES SHALL BE MAINTAINED BY THE CONTRACTOR DURING THE COURSE OF THIS CONTRACT. THE CONTRACTOR SHALL INCLUDE FUNDS IN THE DRAINAGE COSTS OF THE CONTRACT TO OPERATE AND MAINTAIN THE DRAINAGE SYSTEMS DURING THE WORK PROCESS.
THE UTILITIES ARE THE PROPERTY OF THE FOLLOWING:

WATER
CITY OF CLERMONT
UTILITIES DEPARTMENT
685 WEST MONTROSE STREET
CLERMONT, FL 34711
(352) 241-7335

POWER
PROGRESS ENERGY
P.O. BOX 120069
CLERMONT, FL 34712
(800) 432-4770

POWER
SUMTER ELECTRIC
293 S. US HIGHWAY 301
SUMTERVILLE, FL 33585
(352) 357-5600

SEWER
CITY OF CLERMONT
UTILITIES DEPARTMENT
685 WEST MONTROSE STREET
CLERMONT, FL 34711
(352) 241-7335

CABLE
BRIGHT HOUSE NETWORKS
1617 E HIGHWAY 50
CLERMONT, FL 34711
(352) 394-5541

GAS
LAKE APOPKA NATURAL GAS DISTRICT
676 W. MONTROSE STREET
CLERMONT, FL 34711
(352) 394-3480
(800) 432-4770

TELEPHONE
EMBARQ
260 CITRUS TOWER BLVD.
CLERMONT, FL 34711
(800) 672-6242

TELEPHONE
AT&T
1-800-222-3000

ASBUILTS

THE ENGINEER SHALL DELIVER ASBUILT DRAWING PLANS IN DWG FORMAT IN AUTOCAD FILES VERSION 2000 TO 2010. STANDARD TRANSFER MEDIA WILL BE ACCEPTED. THIS MEDIA INCLUDES CD OR DVD. ALL ASBUILT DATA SHALL BE PROVIDED BY A FLORIDA LICENSED SURVEYOR, SIGNED, SEALED AND DATED BY THE RESPONSIBLE PARTY. SEE INDIVIDUAL SECTIONS (STORM, WATER SYSTEM, ETC.) FOR ADDITIONAL ASBUILT REQUIREMENTS.

THE ENGINEER SHALL DELIVER ONE SCANNED SET OF APPROVED ASBUILT DRAWING PLANS. THE SCANNED SETS SHALL BE COMPLETE AND INCLUDE THE TITLE SHEET, PLAN/PROFILE SHEETS, CROSS-SECTIONS AND DETAILS. EACH INDIVIDUAL SHEET CONTAINED IN THE PRINTED SET OF THE DRAWINGS SHALL BE INCLUDED IN THE ELECTRONIC SUBMITTAL, WITH EACH SHEET BEING CONVERTED INTO AN INDIVIDUAL TIFF FORMAT. THE PLAN SHEETS SHALL BE SCANNED IN TIFF FORMAT AT 400 DPI RESOLUTION TO MAINTAIN LEGIBILITY OF EACH DRAWING. THEN, THE TIFF IMAGES SHALL BE EMBEDDED INTO A SINGLE PDF (ADOBE ACROBAT) FILE REPRESENTING THE COMPLETE PLAN SET. THESE DRAWINGS WILL ASSIST IN THE PROCESS OF PERFORMING QUALITY CONTROL AND QUALITY ASSURANCE ON THE ELECTRONIC SUBMITTAL SPECIFIED IN THIS DOCUMENT. THE DRAWINGS WILL BE REVIEWED FOR FORMAT AND COMPLETENESS. SPECIFICALLY, THE FOLLOWING REQUIREMENTS SHALL BE MET.

1. INCLUDE A LABEL ON THE MEDIA INDICATING PROJECT NAME AND NUMBER, CONSULTANT NAME, PROJECT MANAGER AND TELEPHONE NUMBER, TYPE OF SUBMITTAL (APPROVED CONSTRUCTION PLANS OR ASBUILT DRAWINGS), ONLY DRAWINGS RELEVANT TO THE PROJECT'S PHASE OF SUBMITTAL SHALL BE INCLUDED. FOR EXAMPLE, DO NOT INCLUDE "BID SET" DRAWINGS IN A "ASBUILT DRAWING" SUBMITTAL. ALSO, DO NOT INCLUDE DRAWINGS OR DOCUMENTS THAT WOULD NOT NORMALLY BE INCLUDED IN THE SET OF PRINTED DRAWINGS, EXCEPT FOR BASE DRAWINGS OR DRAWINGS TO BE EXTERNALLY REFERENCED.

2. RECORD DRAWING DATA TO BE UPLOADED WILL INCLUDE ONLY NEW CONSTRUCTION AND CARE WILL BE TAKEN TO EXCLUDE ANY "EXISTING" FACILITIES FROM THIS DATASET SO AS TO NOT DUPLICATE INFORMATION IN THE GIS SYSTEM. EXISTING DATA CAN BE INCLUDED IN THE DRAWING BUT SHOULD RESIDE ON SEPARATE LAYERS. IT IS RECOMMENDED THAT THE PREFIX "EX-" BE ADDED TO THE LAYERS OF ALL EXISTING DATA

3. THE FOLLOWING ARE FILE FORMAT AND LAYER NAME STANDARDS:

   a) A FOLDER SHALL BE CREATED WITH THE NAMED PROJECT AND PHASE NUMBER
   b) A FILE NAMED COVERSHEET.DWG
   c) FILE NAMED SITE_PLAN.DWG SHOWING ONLY THE FOLLOWING 5 LAYERS VISIBLE:
      -LAYER NAMED LOTS
      -LAYER NAMED LOT NUMBERS
      -LAYER NAMED ADDRESSES
      -LAYER NAMED ROW SHOWING ALL RIGHTS-OF-WAYS
      -LAYER NAMED EOP SHOWING ALL EDGE OF PAVEMENTS
   d) A FILE NAMED MASTERUTILITYPLAN.DWG WITH SITE_PLAN.DWG X-REF AND ONLY THE FOLLOWING 3 LAYERS VISIBLE:
      -LAYER NAMED WATERLINE SHOWING DIFFERENT PIPE SIZES, WATER METERS, AND HYDRANTS
      -LAYER NAMED REUSEWATER AND ALL APPROPRIATE FEATURES
      -LAYER NAMED SEWER AND ALL APPROPRIATE FEATURES
   e) FILE NAMED GRADING_DRAINAGE.DWG WITH SITE_PLAN.DWG X-REF AND ONLY THE FOLLOWING 2 LAYERS VISIBLE:
      -LAYER NAMED STORMWATER AND ALL APPROPRIATE FEATURES
      -LAYER NAMED SPOTELEV SHOWING ALL SPOT ELEVATIONS
      -ANY OTHER LAYERS PERTINENT TO THE GRADING AND DRAINAGE OF THE SITE
   f) IF APPLICABLE, A FILE NAMED OFF_SITE_UTILITIES.DWG
      INCLUDE ANY OTHER FILES PERTINENT TO THE PROJECT (SURVEY, DETAILS, X-REFS ETC.)

PERMITS AND PERMIT REQUIREMENTS

THE CONTRACTOR SHALL OBTAIN FROM THE OWNER COPIES OF ALL REGULATORY AND LOCAL AGENCY PERMITS. THE CONTRACTOR SHALL BE EXPECTED TO REVIEW AND ABIDE BY ALL THE REQUIREMENTS AND LIMITATIONS SET FORTH IN THE PERMITS. A COPY OF THE PERMIT SHALL BE KEPT ON THE JOB AT ALL TIMES.

LAYOUT AND CONTROL

UNLESS OTHERWISE NOTED ON THE PLANS, THE CONTRACTOR SHALL PROVIDE FOR THE LAYOUT OF ALL THE WORK TO BE CONSTRUCTED. BENCHMARK INFORMATION SHALL BE PROVIDED TO THE CONTRACTOR BY THE OWNER OR OWNER'S SURVEYOR. ANY DISCREPENCIES BETWEEN FIELD MEASUREMENTS AND CONSTRUCTION PLAN INFORMATION SHALL BE BROUGHT TO THE ATTENTION OF THE ENGINEER IMMEDIATELY.

QUALITY CONTROL TESTING REQUIREMENTS

ALLTESTING RESULTS SHALL BE PROVIDED TO THE OWNER/OPERATOR, CITY OF CLERMONT, AND THE ENGINEER. TESTING REQUIREMENTS ARE TO BE IN ACCORDANCE WITH THE OWNER/OPERATOR'S SPECIFICATIONS AND REQUIREMENTS. ALL TEST RESULTS SHALL BE PROVIDED (PASSING AND FAILING) ON A REGULAR AND IMMEDIATE BASIS. CONTRACTOR SHALL PROVIDE TESTING SERVICES THROUGH A FLORIDA LICENSED GEOTECHNICAL ENGINEERING FIRM ACCEPTABLE TO THE OWNER AND THE ENGINEER. CONTRACTOR TO SUBMIT TESTING FIRM TO OWNER FOR APPROVAL PRIOR TO COMMENCING TESTING.

SHOP DRAWINGS

SHOP DRAWINGS AND CERTIFICATIONS FOR ALL STORM DRAINAGE, WATER SYSTEM, SEWER SYSTEM, AND PAVING SYSTEM MATERIALS AND STRUCTURES ARE REQUIRED. THE CONTRACTOR SHALL SUBMIT SHOP DRAWINGS TO THE ENGINEER FOR APPROVAL PRIOR TO ORDERING THE MATERIALS REQUIRED FOR CONSTRUCTION.

EARTHWORK

EARTHWORK QUANTITIES

THE CONTRACTOR SHALL PERFORM HIS OWN INVESTIGATIONS AND CALCULATIONS AS NECESSARY TO ASSURE HIMSELF OF EARTHWORK QUANTITIES. THERE IS NO IMPLICATION THAT EARTHWORK BALANCES, AND THE CONTRACTOR SHALL BE RESPONSIBLE FOR ANY IMPORT FILL NEEDED, OR FOR REMOVAL AND DISPOSAL OF EXCESS MATERIALS.

EROSION CONTROL

EROSION AND SILTRATION CONTROL MEASURES ARE TO BE PROVIDED AND INSTALLED PRIOR TO COMMENCEMENT OF CONSTRUCTION. THESE MEASURES ARE TO BE INSPECTED BY THE CONTRACTOR ON A REGULAR BASIS AND ARE TO BE MAINTAINED OR REPAIRED ON AN IMMEDIATE BASIS AS REQUIRED. REFER TO WATER MANAGEMENT DISTRICT PERMIT FOR ADDITIONAL REQUIREMENTS FOR EROSION CONTROL AND SURFACE DRAINAGE. ALL AREAS DISTURBED DURING CONSTRUCTION SHALL BE STABILIZED WITH SOD WITHIN 30 DAYS OF COMPLETION OF CONSTRUCTION. OTHER MATERIALS SHALL BE REVIEW AND APPROVED BY CITY.

WETLAND PROTECTION

THE LIMITS OF THE ON-SITE WETLANDS HAVE BEEN PROVIDED TO THE CONTRACTOR ON THE CONSTRUCTION PLANS OR ON PERMIT MATERIALS. THE WETLANDS ARE TO BE PROTECTED FROM DISTURBANCE AT ALL TIMES. CONTRACTOR SHALL PROVIDE EROSION, SILTATION, AND DIVERSION MEASURES PRIOR TO COMMENCEMENT OF CONSTRUCTION. THE CONTRACTOR SHALL OBTAIN A COPY OF EACH PERMIT RELATING TO WETLANDS AND WATER MANAGEMENT AND ADHERE TO ALL PROVISIONS AND CONDITIONS THERETO.

LIMITS OF DISTURBANCE

AT NO TIME SHALL THE CONTRACTOR DISTURB SURROUNDING PROPERTIES OR TRAVEL ON SURROUNDING PROPERTIES WITHOUT WRITTEN CONSENT FROM THE PROPERTY OWNER. REPAIR OR RECONSTRUCTION OF DAMAGED AREAS ON SURROUNDING PROPERTIES SHALL BE PERFORMED BY THE CONTRACTOR ON AN IMMEDIATE BASIS. ALL COSTS FOR REPAIRS SHALL BE THE RESPONSIBILITY OF THE CONTRACTOR AND NO EXTRA COMPENSATION SHALL BE PROVIDED. GRADING AND/OR CLEARING ON PROPERTIES OTHER THAN SHOWN ON THE APPROVED PLANS IS PROHIBITED.

TREE REMOVAL

THE CONTRACTOR SHALL NOTIFY THE OWNER AND THE ENGINEER WHEN ALL WORK IS LAID OUT (SURVEY STAKED), SO THAT A DETERMINATION MAY BE MADE OF SPECIFIC TREES TO BE REMOVED. NO TREES ON THE CONSTRUCTION PLANS AS BEING SAVED SHALL BE REMOVED WITHOUT PERMISSION FROM THE OWNER, ENGINEER AND THE CITY OF CLERMONT.

CLEARING AND GRUBBING

THE CONTRACTOR SHALL BE RESPONSIBLE FOR CLEARING AND GRUBBING FOR SITE CONSTRUCTION INCLUDING CLEARING FOR PAVING, UTILITIES, DRAINAGE FACILITIES AND BUILDING CONSTRUCTION. ALL AREAS TO BE CLEARED SHALL BE FIELD STAKED AND REVIEWED BY THE OWNER AND ENGINEER PRIOR TO ANY CONSTRUCTION.

NO BURN PERMITS (INCLUDING THOSE FOR LAND CLEARING) WILL BE ISSUED IN THE CITY OF CLERMONT WITHOUT PRIOR AUTHORIZATION FROM THE CITY MANAGER.

MATERIAL STORAGE/DEBRIS REMOVAL

1) NO COMBUSTIBLE BUILDING MATERIALS MAY BE ACCUMULATED ON THE SITE AND NO CONSTRUCTION WORK INVOLVING COMBUSTIBLE MATERIALS MAY BEGIN UNTIL INSTALLATION OF ALL REQUIRED WATER MAINS AND FIRE HYDRANTS HAVE BEEN COMPLETED, DEP APPROVAL RECEIVED FOR THE WATER MAINS, AND THE HYDRANTS ARE IN OPERATION. CONSTRUCTION WORK INVOLVING NON-COMBUSTIBLE MATERIALS, SUCH AS CONCRETE, MASONARY AND STEEL MAY BEGIN PRIOR TO THE FIRE HYDRANTS BEING OPERATIONAL.

2) ALL MATERIALS EXCAVATED SHALL REMAIN THE PROPERTY OF THE OWNER AND SHALL BE STOCKPILED AT ON-SITE LOCATIONS AS SPECIFIED BY THE OWNER. MATERIALS SHALL BE STOCKPILED SEPARATELY AS TO USABLE (NONORGANIC) FILL STOCKPILES AND ORGANIC (MUCK) STOCKPILES IF MUCK IS ENCOUNTERED. CONTRACTOR SHALL BE RESPONSIBLE FOR THE REMOVAL OF ALL UNSUITABLE FILL MATERIALS FROM THE SITE. ALL CLAY ENCOUNTERED SHALL BE EXCAVATED OUT AND REPLACED WITH CLEAN GRANULAR FILL MATERIALS.

FILL MATERIAL

ALL MATERIALS SHALL CONTAIN NO MUCK, STUMPS, ROOTS, BRUSH, VEGATATIVE MATTER, RUBBISH OR OTHER MATERIAL THAT WILL NOT COMPACT INTO A SUITABLE AND ENDURING BACKFILL. FILL SHALL BE CLEAN, NON-ORGANIC, GRANULAR MATERIAL WITH NOT MORE THAN 10% PASSING THE NO. 200 SIEVE.

COMPACTION

FILL MATERIALS PLACED UNDER ROADWAYS SHALL BE COMPACTED TO AT LEAST 98% OF THE MAXIMUM DENSITY AS SPECIFIED IN AASHTO T-180. ALL OTHER FILL AREAS ARE TO BE COMPACTED TO AT LEAST 95% MAXIMUM DENSITY AS SPECIFIED IN AASHTO T-180. FILL MATERIALS SHALL BE PLACED AND COMPACTED IN A MAXIMUM OF 12" LIFTS. THE CONTRACTOR SHALL PROVIDE THE ENGINEER AND OWNER WITH ALL (PASSING AND FAILING) TESTING RESULTS. RESULTS SHALL BE PROVIDED ON A TIMELY AND REGULAR BASIS PRIOR TO CONTRACTOR'S PAY REQUEST SUBMITTAL FOR THE AFFECTED WORK.

PAVEMENT AND/OR ROAD AND RIGHT-OF-WAY WORK

ALL PRESSURE PIPE UNDER ROADWAY SHALL BE DIP EXTENDING 5' FROM EDGE OF PAVEMENT.

OWNER/OPERATOR

THE ENTITY THAT WILL OWN, OPERATE AND MAINTAIN THE ROADWAYS SHOWN ON THESE PLANS IS FDOT, LAKE COUNTY OR THE CITY OF CLERMONT. THE CONTRACTOR SHALL BE EXPECTED TO MEET ALL THE REQUIREMENTS OF THAT ENTITY.

GENERAL DESIGN INTENT

ALL PAVING SURFACES IN INTERSECTIONS AND ADJACENT SECTIONS SHALL BE GRADED TO DRAIN POSITIVELY IN THE DIRECTION SHOWN BY THE FLOW ARROWS ON THE PLANS AND TO PROVIDE A SMOOTHLY TRANSITIONED DRIVING SURFACE FOR VEHICLES WITH NO SHARP BREAKS INGRADE, AND NO UNUSUALLY STEEP OR REVERSE CROSS SLOPES. APPROACHES TO INTERSECTIONS AND ENTRANCE AND EXIT GRADES TO INTERSECTIONS WILL HAVE TO BE STAKED IN THE FIELD AT DIFFERENT GRADES THAN THE CENTERLINE GRADES TO ACCOMPLISH THE PURPOSES OUTLINED. IN ADDITION, THE STANDARD CROWN WILL HAVE TO BE CHANGED IN ORDER TO DRAIN POSITIVELY IN THE AREA OF INTERSECTIONS. IT IS THE CONTRACTOR'S RESPONSIBILITY TO ACCOMPLISH THE ABOVE AND THE ENGINEER SHALL BE CONSULTED SO THAT HE MAY MAKE ANY AND ALL REQUIRED INTERPRETATIONS OF THE PLANS OR GIVE SUPPLEMENTARY INSTRUCTION TO ACCOMPLISH THE INTENT OF THE PLANS.

MATERIALS/CONSTRUCTION SPECIFICATIONS

MATERIALS AND CONSTRUCTION METHODS FOR THE ROADWAY CONSTRUCTION SHALL BE IN ACCORDANCE WITH THE FLORIDA DEPARTMENT OF TRANSPORTATION STANDARD SPECIFICATIONS FOR ROAD AND BRIDGE CONSTRUCTION 1991, OR LATEST EDITION.

PAVEMENT SECTION REQUIREMENTS

CONSTRUCTION OF ROADWAYS SHALL BE 12" OF STABILIZED SUBBASE WITH A LIMEROCK BEARING PATIO OF (LBR) 40 COMPACTED TO THE MODIFIED PROCTOR MAXIMUM DRY DENSITY OF 98% PER AASHTO T-180, 6" OF LIMEROCK BASE COURSE, (LBR) 100, COMPACTED TO THE MODIFIED PROCTOR MAXIMUM DRY DENSITY OF 98% PER AASHTO T-180 AND 2" TYPE S-111 OF RECYCLED ASPHALTIC CONCRETE SURFACE COURSE WITH A MINIMUM STABILITY OF 1500 LBS. SUBGRADE PREPARATION AND PAVEMENT INSTALLATION SHALL CONFORM TO FDOT STANDARDS AND SOILS REPORT RECOMMENDATIONS.

SIDEWALKS

SIDEWALKS ARE TO BE CONSTRUCTED IN THE AREA AS SHOWN ON THE CONSTRUCTION PLANS. THE 5' SIDEWALK SHALL BE CONSTRUCTED OF 4 INCHES OF CONCRETE WITH A 28 DAY COMPRESSION STRENGTH OF 2500 PSI. JOINTS SHALL BE EITHER TOOLED OR SAWCUT AT A DISTANCE OF 5' LENGTHS, HANDICAPPED RAMPS SHALL BE PROVIDED AT ALL INTERSECTIONS AND BE IN ACCORDANCE WITH STATE REGULATIONS FOR HANDICAP ACCESSIBILITY.

PAVEMENT MARKINGS/SIGNAGE

PAVEMENT MARKINGS AND SIGNAGE SHALL BE PROVIDED AS SHOWN ON THE CONSTRUCTION PLANS AND SHALL MEET THE REQUIREMENTS OF THE OWNER/OPERATOR. SIGNAGE SHALL BE IN CONFORMANCE WITH MUTCD (LATEST EDITION). A 48-HOUR PAVEMENT CURING TIME WILL BE PROVIDED PRIOR TO APPLICATION OF THE PAVEMENT MARKINGS. REFLECTIVE PAVEMENT MARKINGS SHALL BE INSTALLED IN ACCORDANCE WITH FDOT INDEX NO. 17352.

TRAFFIC CONTROL

AN MOT PLAN SHALL BE SUBMITTED TO THE INSPECTOR PRIOR TO COMMENCEMENT OF WORK. A MINIMUM OF 2-WAY, ONE LANE TRAFFIC SHALL BE MAINTAINED IN THE WORK SITE AREA. ALL CONSTRUCTION WARNING SIGNAGE SHALL BE IN PLACE PRIOR TO COMMENCEMENT OF CONSTRUCTION AND BE MAINTAINED THROUGHOUT CONSTRUCTION. ACCESS SHALL BE CONTINUOUSLY MAINTAINED FOR ALL PROPERTY OWNERS SURROUNDING THE WORK SITE AREA. LIGHTED WARNING DEVICES ARE TO BE OPERATIONAL PRIOR TO DUSK EACH NIGHT DURING CONSTRUCTION.

CURBING

CURBING SHALL BE CONSTRUCTED WHERE NOTED ON THE CONSTRUCTION PLANS. CONCRETE FOR CURBS SHALL BE DEPARTMENT OF TRANSPORTATION CLASS "1" CONCRETE WITH A 28 DAY COMPRESSION STRENGTH OF 2500 PSI. ALL CURBS SHALL HAVE SAW CUT CONTRACTION JOINTS AND SHALL BE CONSTRUCTED AT INTERVALS NOT TO EXCEED 10'-0" ON CENTER. CONSTRUCTION OF CURBS SHALL BE IN CONFORMANCE WITH FDOT STANDARD SPECIFICATIONS FOR ROAD AND BRIDGE CONSTRUCTION (1991) SECTION 520 AND DETAILS PROVIDED ON THE CONSTRUCTION PLANS.

R/W RESTORATION

ALL AREAS WITHIN THE RIGHT-OF-WAYS SHALL BE FINISH GRADED WITH A SMOOTH TRANSITION INTO EXISTING GROUND. ALL SWALES SHALL BE STABILIZED IMMEDIATELY AFTER FINAL GRADING. ALL DISTURBED AREAS SHALL BE RAKED CLEAN OF ALL LIMEROCK AND ROCKS AND SODDED AFTER FINAL GRADING IN ACCORDANCE WITH THE CONSTRUCTION PLANS PRIOR TO FINAL INSPECTION. ALL GRASSING (SEED OR SOD) SHALL BE MAINTAINED BY THE CONTRACTOR UNTIL FINAL ACCEPTANCE BY THE OWNER/OPERATOR.

SITE ACCESS

ALL ACCESS TO THE JOB SITE FOR CONSTRUCTION AND RELATED ACTIVITIES SHALL BE BY EXISTING STREETS AND ROADS, OR BY THE CONSTRUCTION EASEMENT AS APPROVED BY THE CITY OF CLERMONT.

POTABLE WATER/FIRE SYSTEMS

OWNER/OPERATOR

THE ENTITY THAT WILL OWN, OPERATE AND MAINTAIN THE WATER SYSTEM SHOWN ON THESE PLANS IS CITY OF CLERMONT. THE CONTRACTOR SHALL BE EXPECTED TO MEET ALL THE REQUIREMENTS OF THAT ENTITY, UNLESS OTHERWISE INDICATED ON PLANS.

LANDSCAPING

PROVIDE MINIMUM 5' SEPARATION FROM UTILITIES AND TREES WITH INVASIVE ROOT SYSTEMS.

PIPE MATERIALS

SHOP DRAWINGS SHALL BE SUBMITTED FOR ALL CITY INFRASTRUCTURE TO BE CONSTRUCTED. WATER SYSTEM SHOP DRAWINGS SHALL BE SUBMITTED TO THE ENGINEER AND SHALL MEET CITY SPECIFICATIONS.

POLYVINYL CHLORIDE PLASTIC PIPE (PVC) 4" THROUGH 12" SHALL BE MANUFACTURED IN ACCORDANCE WITH ANSI/AWWA C900 (LATEST EDITION) AND SHALL HAVE A MINIMUM WORKING PRESSURE OF 150 PSI AND A DR (DIMENSION RATIO) OF 18. ALL PVC PIPE SHALL BEAR THE NSF LOGO FOR POTABLE WATER. JOINTS SHALL BE OF THE PUSH-ON TYPE AND COUPLINGS CONFORMING TO ASTM D3139, DR18 PIPE.

DUCTILE IRON PIPE (DIP) SHALL BE STANDARD PRESSURE CLASS 350 IN SIZES 4" THROUGH 12" AND CONFORM TO ANSI/AWWA C150/A21.50 (LATEST EDITION). ALL DUCTILE IRON PIPE SHALL HAVE A STANDARD THICKNESS OF CEMENT MORTAR LINING AS SPECIFIED IN ANSI/AWWA C104/A21.4 (LATEST EDITION). PIPE JOINTS SHALL BE OF THE PUSH-ON RUBBER GASKET TYPE CONFORMING TO ANSI/AWWA C111/A21.11 (LATEST EDITION).

ALL PRESSURE PIPE UNDER ROADWAY SHALL BE DIP EXTENDING 5' FROM EDGE OF PAVEMENT.

3" METALLIC LOCATOR TAPE WITH LOCATOR WIRE SHALL BE INSTALLED ON ALL WATER MAINS PER DETAIL.

PIPE MATERIALS CONT.

PIPE SIZES GREATER THAN 12" BE SEPARATELY SPECIFIED ON THE PLANS; WITH THICKNESS CLASSES TO BE SHOWN BASED ON WORKING PRESSURES, PIPE DEPTH AND TRENCH CONDITIONS. FITTINGS FOR DUCTILE IRON PIPE AND PVC C-900 PIPE SHALL BE DUCTILE IRON AND SHALL CONFORM TO ANSI/AWWA C153/A21.10 (LATEST EDITION) AND SHALL BE CEMENT LINED IN CONFORMANCE WITH ANSI/AWWA C104/A21.4 (LATEST EDITION).

POLYETHYLENE WRAP USED FOR CORROSION PREVENTION ON DUCTILE IRON PIPE SHALL CONFORM TO THE REQUIREMENTS OF ANSI/ASTM D1248. THE MINIMUM NOMINAL THICKNESS SHALL BE 0.008 IN. (8 MILS). INSTALLATION OF POLY WRAP SHALL BE IN ACCORDANCE WITH AWWA C105. TRANSMISSION MAIN SHALL BE DIP RATED FOR 250 PSI.

VALVES

GATE VALVES SHALL BE RESILIENT SEAT AND SHALL CONFORM TO ANSI/AWWA C509.87 WITH HANDWHEEL OR WRENCH NUT, EXTENSION STEMS AND OTHER APPURTENANCES AS REQUIRED (OPERATION NUT TO BE WITHIN 3 FEET OF FINISH GRADE). MANUFACTURER'S CERTIFICATION OF THE VALVES COMPLIANCE WITH AWWA SPECIFICATION C509 AND TESTS LISTED THEREIN WILL BE REQUIRED. SEE CITY OF CLERMONT APPROVED PRODUCT LIST.

POTABLE WATER AND REUSE VALVES

ANY VALVE USED IN A POTABLE WATER OR REUSE WATER APPLICATION THAT IS 4" OR LARGER MUST BE A RESILIANT SEAT AND CONFORM TO ALL AWWA SPECIFICATIONS.

AIR RELEASE VALVES

AIR RELEASE VALVES SHALL BE PLACED AT HIGH POINTS OF THE TRANSMISSION MAIN TO PERMIT ESCAPE OF TRAPPED AIR. THE VALVE SIZE, LOCATION AND METHOD OF INSTALLATION SHALL BE INDICATED ON THE DRAWINGS OR AS DIRECTED BY THE ENGINEER. SEE CITY OF CLERMONT APPROVED PRODUCTS LIST.

VALVE BOXES

VALVE BOXES ON BURIED POTABLE WATER MAINS SHALL BE ADJUSTABLE, CAST IRON CONSTRUCTION, WITH MINIMUM INTERIOR DIAMETER OF 5" WITH COVERS CAST WITH THE INSCRIPTION IN LEGIBLE LETTERING ON TOP: WATER. BOXES SHALL BE SUITABLE FOR THE APPLICABLE SURFACE LOADING AND VALVE SIZE, AND SHALL BE MANUFACTURED BY MUELLER COMPANY, MODEL 10364, OR APPROVED EQUAL. VALVE BOX PADS SHALL BE 24"x24"x4" THICK CONCRETE WITH #4 REINFORCING BARS. PAD TO BE SET AT FINISHED GRADE WITH RECESSED DETECTOR WIRE CONDUIT PORT PER DETAIL. REUSE MAINS TO HAVE SQUARE TOP VALVE BOXES.

WATER SERVICES

UNLESS OTHERWISE NOTED IN THE PLANS, THE UTILITY COMPANY SHALL PROVIDE AND INSTALL WATER METERS. CONTRACTOR SHALL CONSTRUCT WATER SERVICE THROUGH THE CURB STOP AND SET METER BOXES TO FINISHED GRADE AS SHOWN ON THE WATER SYSTEM DETAIL SHEET. POLYETHYLENE (PE) PRESSURE PIPE FOR WATER SERVICES 1/2" THROUGH 3" SHALL CONFORM TO AWWA C901.88, MIN. 200 PSI, CTS 5100 (DR-9) ASTM D-2737, 200 PSI. THE SERVICE SHALL BE COMPLETE THROUGH THE CURB STOP AS SHOWN ON THE DETAIL SHEET AND SHALL BE OF THE TYPE REQUIRED FOR COMPATIBILITY WITH THE SERVICE LINES SPECIFIED, UTILITY COMPANY SHALL PROVIDE AND INSTALL IRRIGATION METERS. WHERE RECLAIM SERVICE IS NOT PROVIDED, CONTRACTOR SHALL CONSTRUCT IRRIGATION SERVICE THROUGH THE CURB STOP AND SET NEW BOXES TO FINISHED GRADE AS SHOWN ON THE WATER SYSTEM DETAIL SHEET. SEE CITY OF CLERMONT APPROVED PRODUCT LIST.

WATER SERVICES 2.5" AND LARGER

THE CONTRACTOR IS RESPONSIBLE FOR PROVIDING AND INSTALLING A NEPTUNE R450 METER WITH E-CODER REGISTER, 12795-220S1227 NEPTUNE R450 WALL MIU (CLERMONT SPECIAL) AND 12596-002 NEPTUNE WALL MIU ADAPTOR F/PIT STYLE REGISTER. THE ASSEMBLY SHALL BE ABOVE GROUND STYLE WITH BYPASS SET UP FOR METER TESTING. A STRAINER SHALL BE INSTALLED PRIOR TO THE METER AND AND SHALL BE FROM THE SAME MANUFACTURER AS THE WATER METER. INCLUDE SPOOL PIECES 5X THE DIAMETER UPSTREAM AND 10X THE DIAMETER DOWNSTREAM MINIMUM LENGTH. ISOLATION VALVES SHALL BE INSTALLED PRIOR TO THE METER AND ANOTHER ONE PAST THE METER TEST PORT AND BEFORE THE THE DOWNSTREAM BYPASS CONNECTION. BYPASS PIPING SHALL HAVE A LOCKABLE ISOLATION VALVE UNLESS IT IS UNDERGROUND.

MATERIALS AS REQUIRED BY THE CITY OF CLERMONT

THE CONTRACTOR SHALL CUT A "W" IN THE CURB TOP AT EACH WATER SERVICE AND A "V" AT ALL VALVE LOCATIONS. CUT W'S AND V'S SHALL BE HIGHLIGHTED WITH BLUE PAINT. SEE WATER SYSTEM DETAILS FOR OTHER SERVICE LOCATION AND MARKING REQUIREMENTS.

PIPE INSTALLATION

PIPE INSTALLATION OF PVC WATER MAIN SHALL BE IN CONFORMANCE WITH ASTM D2774 (LATEST EDITION). INSTALLATION OF DUCTILE IRON PIPE WATER MAIN SHALL BE IN CONFORMANCE WITH AWWA C600.87.

COMPACTED BACKFILL SHALL BE TO 98% MAXIMUM DENSITY AS DETERMINED BY AASHTO T-180 UNDER ALL PAVEMENTS WITH 12" MAXIMUM LIFT THICKNESS. OTHER COMPACTION OF BACKFILL SHALL BE TO 95% MAXIMUM DENSITY AS DETERMINED BY AASHTO T-180 WITH 12" MAXIMUM LIFT THICKNESS. SEE PIPE TRENCHING DETAILS.

MINIMUM COVER OVER ALL PIPE SHALL BE 36" FROM TOP OF PIPE TO FINISHED GRADE. SEE PLAN AND PROFILE SHEETS FOR REQUIRED DEPTH.

WATER MAINS ARE TO BE INSTALLED SO AS TO PROVIDE A MINIMUM VERTICAL CLEARANCE OF 12" OR A MINIMUM HORIZONTAL CLEARANCE OF 10' FROM ALL OTHER UTILITIES. IF THE MINIMUM CLEARANCE CAN NOT BE ACHIEVED, THEN DUCTILE IRON WATER MAIN SHALL BE SPECIFIED 10 FEET EITHER SIDE OF THE CROSSING. HORIZONTAL AND VERTICAL MINIMUM SEPARATION DISTANCE REQUIREMENTS BETWEEN WATER MAIN AND ALL OTHER UTILITIES SHALL COMPLY WITH 62-555.314 (1), (2), (3), (4) AND (5) FAC.

ALL WATER MAINS SHALL BE INSTALLED WITH RESTRAINED JOINT FITTINGS. NO CONCRETE THRUST BLOCKS TO BE USED.

ALL PLUGS, CAPS, TEES, BENDS, FIRE HYDRANTS, VALVES, ETC. SHALL BE PROVIDED WITH MEGALUG PIPE RESTRAINTS. FOR RESTRAINT CONSTRUCTION SPECIFICATIONS, REFER TO THE WATER SYSTEM DETAILS.

ALL VALVES TO BE RESTRAINED AS DEAD ENDS IN BOTH DIRECTIONS.

GENERAL NOTES AND DETAILS
REVISED
12-8-2015

NO.	REVISIONS	DATE

DESIGN XXX
DRAWN XXX
DATE XXX

CITY OF CLERMONT
GENERAL NOTES

CITY OF CLERMONT
685 WEST MONTROSE STREET
P.O. BOX 120219
CLERMONT, FLORIDA 34711
PHONE: (352) 241-7335

SIGNATURE AND SEAL

DRAWING FILE

DRAWING
GN1

SHEET OF

PIPE IDENTIFICATION

3" METALLIC LOCATOR TAPE SHALL BE BURIED IN THE WATER MAIN TRENCH 18" DIRECTLY ABOVE THE WATER MAIN. A CONTINUOUS COPPER DETECTOR WIRE SHALL BE ATTACHED AS SHOWN ON THE WATER DETAIL SHEET. WIRE CONNECTIONS (SPLICES) SHALL BE DONE WITH WIRE NUT AND GREASE FILLED PROTECTIVE CAP.

ALL PIPE AND PIPE FITTINGS SHALL BE COLOR CODED OR MARKED IN ACCORDANCE WITH SUB- PARAGRAPH 62-555.320(21)(b)3, F.A.C., USING BLUE AS A PREDOMINANT COLOR. (UNDERGROUND PLASTIC PIPE SHALL BE SOLID-WALL BLUE PIPE, SHALL HAVE A CO-EXTRUDED BLUE EXTERNAL SKIN OR SHALL BE WHITE OR BLACK PIPE WITH BLUE STRIPES INCORPORATED INTO, OR APPLIED TO, THE PIPE WALL; AND UNDERGROUND METAL OR CONCRETE PIPE SHALL HAVE BLUE STRIPES APPLIED TO THE PIPE WALL. PIPE STRIPED DURING MANUFACTURING OF THE PIPE SHALL HAVE CONTINUOUS STRIPES THAT RUN PARALLEL TO THE AXIS OF THE PIPE, THAT ARE LOCATED AT NO GREATER THAN 90-DEGREE INTERVALS AROUND THE PIPE, AND THAT WILL REMAIN INTACT DURING AND AFTER INSTALLATION OF THE PIPE. IF TAPE OR PAINT IS USED TO STRIPE PIPE DURING INSTALLATION OF THE PIPE, THE TAPE OR PAINT SHALL BE APPLIED IN A CONTINUOUS LINE THAT RUNS PARALLEL TO THE AXIS OF THE PIPE AND THAT IS LOCATED ALONG THE TOP OF THE PIPE; FOR PIPE WITH AN INTERNAL DIAMETER OF 24 INCHES OR GREATER, TAPE OR PAINT SHALL BE APPLIED IN CONTINUOUS LINES ALONG EACH SIDE OF THE PIPE AS WELL AS ALONG THE TOP OF THE PIPE. ABOVE GROUND PIPE SHALL BE PAINTED BLUE OR SHALL BE COLOR CODED OR MARKED LINE UNDERGROUND PIPE.) RHINO TRIVIEW FLEXMARKING POST SHALL BE PLACED ON ALL TRANSMISSION MAINS AT 500 FEET.

DISINFECTION AND TESTING

ALL PIPE SHALL BE DISINFECTED IN ACCORDANCE WITH AWWA STANDARD C651.86.

PVC WATER MAINS SHALL BE INSTALLED; PRESSURE AND LEAK TESTED IN ACCORDANCE WITH AWWA C605 AND DUCTILE IRON WATER MAINS IN ACCORDANCE WITH AWWA C600, [62-555.320(21)(B) 1 AND 62-555.330, F.A.C]. ALL INSTALLATION, TESTING AND FIELD PROCEDURES MUST BE PROVIDED AND MUST CONFORM TO THE APPLICABLE AWWA STANDARDS.

THE CONTRACTOR SHALL PROVIDE AT HIS OWN EXPENSE ALL NECESSARY TEST PUMPING EQUIPMENT, WATER, WATER METERS, PRESSURE GAUGES AND OTHER EQUIPMENT, MATERIAL AND FACILITIES REQUIRED FOR ALL HYDROSTATIC AND LEAKAGE TESTING. CONTRACTOR SHALL CONTACT THE ENGINEER, OWNER/OPERATOR AND CITY IN WRITTEN FORM, FORTY EIGHT (48) HOURS IN ADVANCE OF PROPOSED TESTING. THE CONTRACTOR SHALL PERFORM SATISFACTORY PRETESTING PRIOR TO NOTIFICATION.

THE WATER SYSTEM SHALL BE SOAK TESTED 24 HOURS @150 PSI AND TESTED FOR LEAKAGE AT 150 PSI FOR TWO (2) HOURS, WITH ALLOWABLE LEAKAGE IN ACCORDANCE WITH ABOVE STANDARDS.

CONTRACTOR SHALL OBTAIN A COPY OF THE FDEP WATER SYSTEM PERMIT AND PULL BACTERIOLOGICAL TEST SAMPLES FROM THE SAMPLE POINTS SPECIFIED IN THAT PERMIT. CONTINUITY TEST SHALL BE PERFORMED ON WIRE BY CONTRACTOR.

CONNECTIONS TO EXISTING WATER MAINS

PRIOR TO THE CONNECTION TO ANY EXISTING MAIN, THE PROPOSED WATER MAIN SHALL BE DISINFECTED, HAVE ENGINEER APPROVED PRESSURE TESTING AND HAVE FDEP CLEARANCE. REFER TO FDEP PERMIT FOR ANY ADDITIONAL REQUIREMENTS.

ASBUILT DRAWINGS

THE CONTRACTOR SHALL PROVIDE VERTICAL AND HORIZONTAL "ASBUILT" INFORMATION RELATIVE TO ALL CONSTRUCTED UTILITIES AND STRUCTURES. THREE SETS SHALL BE PROVIDED FOR REVIEW. ONCE APPROVED BY THE UTILITY, ONE REPRODUCIBLE SET SHALL BE PROVIDED.

AS-BUILT INFORMATION FOR THE WATER SYSTEM SHALL INCLUDE, BUT NOT BE LIMITED TO, THE FOLLOWING:

1. LOCATION OF ALL VALVES, FITTINGS, HYDRANTS AND SERVICES – HORIZONTAL AND VERTICAL.

2. LOCATION OF THE WATER MAIN TIED WITH COORDINATES FOR THE SUBDIVISION.

3. CERTIFICATION AS TO THE SYSTEM MEETING THE MINIMUM COVER REQUIREMENTS.

4. HORIZONTAL AND VERTICAL DATA FOR ANY CONSTRUCTION WHICH DEVIATES FROM THE APPROVED ENGINEERING PLANS.

5. UTILITY LOCATES ON SYSTEMS INSTALLED UNDER THIS CONTRACT SHALL REMAIN THE RESPONSIBILITY OF THE CONTRACTOR/DEVELOPER UNTIL ASBUILT DRAWINGS ARE REVIEWED AND APPROVED BY THE UTILITY.

SANITARY SEWER NOTES

1. ALL PRESSURE PIPE UNDER ROADWAY SHALL BE DIP EXTENDING 5' FROM EDGE OF PAVEMENT.

MAINS AND MANHOLES

1. ALL GRAVITY SANITARY SEWER MAINS, LATERALS, AND APPURTENANCES SHALL BE CONSTRUCTED OF SDR26 PVC PIPE MEETING ASTM 3034, AND SHALL HAVE A MINIMUM COVER OF THREE (3) FEET.

2. WHERE REQUIRED, MAINS SHALL BE CLASS 150 DUCTILE IRON PIPE (DIP) MEETING AWWA C150 AND C151. MAINS SHALL BE 60 MIL EPOXY COATED WITH POLYETHYLENE WRAP CONFORMING TO AWWA C105.

3. ALL PVC PIPE SHALL BEAR THE NSF-DW SEAL.

4. JOINTS SHALL BE INTEGRAL BELL ELASTOMERIC GASKET JOINTS MANUFACTURED IN ACCORDANCE WITH ASTM D3212 AND ASTM F477. APPLICABLE UNI-BELL PLASTIC PIPE ASSOCIATION STANDARD IS UNI-B-7.

5. ALL SANITARY MANHOLES SHALL BE PRECAST CONCRETE WITH A MINIMUM WALL THICKNESS OF FIVE (5) INCHES FOR INSIDE DIAMETER OF FOUR (4) FEET.

6. MANHOLES SHALL MEET ASTM C-478. RING AND COVER SHALL BE TRAFFIC BEARING H-20 CLASS 30 MEETING ASTM A-48.

7. INTERIOR AND EXTERIOR WALLS OF ALL MANHOLES SHALL HAVE A MINIMUM OF TWO (2) 8 MIL COATS OF AN APPROVED PROTECTIVE COAL TAR EPOXY.

8. ALL MAINS NOT LOCATED UNDER PAVEMENT SHALL BE MARKED BY A 3" METALLIC LOCATOR TAPE AND TRACER WIRE 18" ABOVE THE CENTERLINE OF PIPE. DROP MANHOLE IF INVERT DIFFERENCE IS GREATER THAN OR EQUAL TO TWO (2) FEET. 3" METALLIC LOCATOR TAPE SHALL BE BURIED IN THE WATER MAIN TRENCH 18" DIRECTLY ABOVE THE WATER MAIN. A CONTINUOUS COPPER DETECTOR WIRE SHALL BE ATTACHED AS SHOWN ON THE WATER DETAIL SHEET.

9. LINING IS REQUIRED OF ALL MANHOLES WITH AN INCOMING SLOPE GREATER THAN 5%. ANY MANHOLE WITH FORCE MAIN TIE IN MUST BE LINED. SEE CITY OF CLERMONT APPROVED PRODUCT LIST.

10. NO DROP SHALL BE GREATER THAN 15 FEET.

LATERALS

1. ALL SERVICE LATERALS AND FITTINGS SHALL BE A MINIMUM OF 6" IN DIAMETER.
2. ALL LATERALS SHALL TERMINATE WITH A 4" CLEAN-OUT AT THE PROPERTY LINE, AND AT A DEPTH TO FINAL GRADE OF 3 FEET. SEE DETAILS FOR LOCATION.
3. THE END OF EACH SERVICE CONNECTION SHALL BE MARKED WITH A 2"x2"x2" ABOVE GRADE WOODEN STAKE OR APPROVED MARKER AND CURB MARKED WITH A 'S'.

FORCEMAINS

1. FORCEMAINS SHALL BE CLASS 350 EPOXY 401 LINED DIP. DIP PIPE SHALL HAVE INTEGRAL BELL PUSH ON TYPE JOINTS CONFORMING TO ASTM D3139.

2. ALL FITTINGS SHALL BE MECHANICAL JOINT DUCTILE IRON WITH 250 PSI MINIMUM PRESSURE RATING. SUITABLE COUPLINGS COMPLYING WITH ASTM SPECIFICATIONS ARE REQUIRED FOR JOINING DISSIMILAR MATERIALS.

3. 3" METALLIC LOCATOR TAPE SHALL BE BURIED IN THE WATER MAIN TRENCH 18" DIRECTLY ABOVE THE WATER MAIN. A CONTINUOUS COPPER DETECTOR WIRE SHALL BE ATTACHED AS SHOWN ON THE WATER DETAIL SHEET.

4. ALL MAINS SHALL HAVE A MINIMUM COVER OF THREE (3) FEET.

5. ALL CONNECTIONS TO EXISTING SEWER FORCEMAINS SHALL BE ACCOMPLISHED WITH A WET TAP AND RESTRAINTS.

6. PROVIDE JOINT RESTRAINT AS SHOWN ON THE WATER DETAIL SHEET.

7. AIR RELEASE AND VACUUM VALVE PRODUCTS SHALL ADHERE TO CITY OF CLERMONT APPROVED PRODUCT LIST.

TESTING

1. SEWAGE COLLECTION SYSTEM
   A. ALL GRAVITY SEWER MAINS REQUIRE LOW PRESSURE AIR TESTING IN ACCORDANCE WITH THE LATEST UNI-BELL STANDARD FOR LOW PRESSURE AIR TESTS. AIR TESTS, AS A MINIMUM, SHALL CONFORM TO THE TEST PROCEEDURES DESRIBED IN ASTM SPECIFICATIONS, ASTM F1417 FOR PLASTIC PIPE.

   B. ALL SEWER MAINS AND LATERALS SHALL BE VIDEO INSPECTED BY A CITY APPROVED VENDOR.

   C. ALL MANHOLES SHALL BE INSPECTED FOR INFILTRATION, ALIGNMENT, FLOW CHANNEL CONSTRUCTION AND COAL TAR EPOXY PAINT THROUGHOUT.

   D. HYDRO-STATIC TESTS CONSISTING OF A HYDROSTATIC PRESSURE TEST AND HYDROSTATIC LEAKAGE TEST SHALL BE CONDUCTED ON ALL NEWLY INSTALLED SEWER FORCE MAIN SYSTEM PRESSURE PIPES AND APPURTENANCES IN ACCORDANCE WITH AWWA C600 OR M23 AS APPLICABLE. THE PRESSURE SHALL BE 150 PSI FOR TWO (2) HOURS.

   E. DEFLECTION TESTS ARE REQUIRED FOR ALL FLEXIBLE PIPE. TESTS SHALL BE PERFORMED WITHOUT MECHANICAL PULLING DEVICES.

TEMPORARY JUMPER CONNECTION NOTES

A TEMPORARY JUMPER CONNECTION IS REQUIRED AT ALL CONNECTIONS BETWEEN EXISTING ACTIVE WATER MAINS AND PROPOSED NEW WATER MAIN IMPROVEMENTS. THE DETAIL PROVIDED IS TO BE USED FOR FILLING ANY NEW WATER MAIN OF ANY SIZE FROM EXISTING ACTIVE WATER MAINS AND FOR FLUSHING OF NEW MAINS UP TO 8" DIAMETER (2.5 FPS MINIMUM VELOCITY) AND FOR TAKING BACTERIOLOGICAL SAMPLES FROM ANY NEW WATER MAIN OF ANY SIZE. THE JUMPER CONNECTION SHALL BE MAINTAINED UNTIL AFTER FILLING, FLUSHING, TESTING AND DISINFECTING OF THE NEW MAIN HAS BEEN SUCCESSFULLY COMPLETED AND CLEARANCE FOR USE HAS BEEN OBTAINED FROM THE FLORIDA DEPARTMENT OF ENVIRONMENTAL PROTECTION (FDEP) AND OTHER PERTINENT AGENCIES HAS BEEN RECEIVED BY THE CITY OF CLERMONT. THIS JUMPER CONNECTION SHALL ALSO BE USED TO MAINTAIN A MINIMUM LEVEL OF DISINFECTION AND UNTIL THE FDEP CLEARANCE LETTER IS OBTAINED AND THE LINES ARE PLACED INTO SERVICE.

ADEQUATE RESTRAINTS SHALL BE PROVIDED TEMPORARILY, AS REQUIRED.

PIPE AND FITTINGS USED FOR CONNECTING THE NEW PIPE TO THE EXISTING PIPE SHALL BE DISINFECTED PRIOR TO INSTALLATION IN ACCORDANCE WITH AWWA C651, 1992 EDITION. THE TAPPING SLEEVE AND THE EXTERIOR OF THE MAIN TO BE TAPPED SHALL BE DISINFECTED BY SPRAYING OR SWABBING PER SECTION II OF AWWA C651-92.

FLUSHING OF ALL WATER MAINS SAHLL BE DONE THROUGH THE TIE-IN VALVE UNDER CONTROLLED CONDITIONS BY THE CITY ONLY. FULL BORE FLUSH IS REQUIRED. THE FOLLOWING PROCEEDURES SHALL BE FOLLOWED:

A. THE TIE-IN VALVES SHALL BE OPERATED ONLY BY THE CITY AND PRESSURE TESTED IN THE PRESENCE OF THE CITY AND ENGINEER TO VERIFY WATER TIGHTNESS PRIOR TO TIE-IN. VALVES WHICH ARE NOT WATERTIGHT SHALL BE REPLACED OR A NEW VALVE INSTALLED IMMEDIATELY ADJACENT TO THE LEAKING VALVE.

B. THE TEMPORARY JUMPER CONNECTION SHALL BE CONSTRUCTED AS DETAILED. THE JUMPER CONNECTION SHALL BE USED TO FILL THE NEW WATER MAIN, FOR PROVIDING WATER FOR BACTERIOLOGICAL SAMPLING OF THE NEW MAIN AS REQUIRED BY THE FDEP PERMIT AND FOR MAINTAINING CHLORINE RESIDUALS IN THE MAINS.
   1. FLUSHING SHALL NOT BE ATTEMPTED DURING PEAK DEMAND HOURS OF THE EXISTING WATER MAIN.
   2. ALL DOWNSTREAM VALVES IN THE NEW SYSTEM MUST BE OPEN PRIOR TO THE CITY OPENING THE TIE-IN VALVE.
   3. PROVIDE FOR AND MONITOR THE PRESSURE AT THE TIE-IN POINT. THE PRESSURE IN THE EXISTING MAIN MUST NOT DROP BELOW 35 PSI.
   4. TIE-IN VALVE SHALL BE OPENED BY THE CITY A FEW TURNS ONLY, ENSURING A PRESSURE DROP ACROSS THE VALVE IS ALWAYS GREATER THAN 10 PSI.

C. THE TIE-IN VALVE SHALL BE LOCKED CLOSED BY THE CITY UNTIL THE FLUSHING BEGINS.

D. THE TIE-IN VALVE SHALL BE OPENED ONLY BY THE CITY FOR FLUSHING OF THE NEW MAIN. THE PROCEEDURE SHALL BE DONE BY THE CITY AND OBSERVED BY THE ENGINEER.

E. AFTER FLUSHING, THE TIE-IN VALVE SHALL BE CLOSED AND LOCKED IN THE CLOSE POSITION BY THE CITY. THE CONTRACTOR SHALL PROVIDE DOCUMENTATION DEMONSTRATING THAT THE RPZ BACK FLOW PREVENTION DEVICE HAS BEEN TESTED WITHIN ONE YEAR AT THE TIME OF INSTALLATION, AND IS IN GOOD WORKING ORDER AT THE TIME OF INSTALLATION. THE TEST SHALL BE PERFORMED BY A CERTIFIED BACK FLOW PREVENTION TECHNICIAN AS APPROVED BY THE CITY OF CLERMONT CROSS-CONNECTION CONTROL PROGRAM. A CERTIFICATE IS REQUIRED BY THE CITY.

EXCEPT AS REQUIRED TO FLUSH LINES TIE-IN VALVE SHALL REMAIN CLOSED AND SHALL BE LOCKED IN THE CLOSE POSITION BY THE CITY. THE TIE-IN VALVE SHALL REMAIN LOCKED CLOSED UNTIL THE NEW SYSTEM HAS BEEN CLEARED FOR USE BY FDEP AND ALL OTHER AGENCIES. UPON RECEIPT OF CLEARANCE FOR USE FROM FDEP AND ALL OTHER AGENCIES, THE CONTRACTOR SHALL REMOVE THE TEMPORARY JUMPER CONNECTION. THE CORPORATION STOPS ARE TO BE CLOSED AND PLUGGED WITH 2" BRASS PLUGS. THERE BE NO LEAKAGE.

ALL INSTALLATION AND MAINTENANCE OF THE TEMPORARY JUMPER CONNECTION AND ASSOCIATED BACK FLOW PREVENTION DEVICE, FITTINGS, VALVES, ETC., SHALL BE THE RESPONSIBILITY OF THE CONTRACTOR.

WATER METERS SHALL BE PAID FOR AT THE CITY HALL AND SHALL BE DELIVERED TO THE JOB SITE BY THE UTILITIES DEPARTMENT.

FIRE HYDRANTS

FIRE HYDRANTS SHALL CONFORM TO THE LATEST EDITION OF AWWA C502.85 AND SHALL BE FURNISHED COMPLETE WITH WRENCH AND OTHER APPURTENANCES. MANUFACTURER'S CERTIFICATION OF COMPLIANCE WITH AWWA C502 AND TESTS LISTED THEREIN WILL BE REQUIRED. ALL HYDRANTS SHALL BE BREAKAWAY TYPE, WITH THE BREAKAWAY SECTION LOCATED SLIGHTLY ABOVE THE FINISH GROUND LINE. HYDRANTS SHALL CONTAIN TWO, TWO AND ONE-HALF INCH (2-1/2") HOSE CONNECTIONS, AND ONE, FOUR AND ONE-HALF INCH (4-1/2") STEAMER CONNECTION WITH NATIONAL STANDARD FIRE HOSE COUPLING SCREW THREADS, FIVE AND ONE-QUARTER INCH (5-1/4") VALVE OPENING, SIX INCH (6") DIAMETER MECHANICAL JOINT INLET, ONE AND ONE-HALF INCH (1-1/2") PENTAGON OPERATING NUT. SHALL OPEN COUNTERCLOCKWISE. HYDRANT MUST BE PAINTED AT FACTORY BY THE MANUFACTURER AND SHALL BE PAINTED IN CONFORMANCE WITH CITY OF CLERMONT REQUIREMENTS (COLORS BASED ON DELIVERED FIRE FLOW). HYDRANTS SHALL BE MUELLER CENTRON (TRAFFIC MODEL A-423) NO SUBSTITUTE. FIRE HYDRANTS TO BE THE BREAK AWAY TYPE WITH A CAST IRON DUCTILE IRON MECHANICAL JOINT HYDRANT TEE, WITH RESILIENT SEAT AND MECHANICAL JOINT GATE VALVE.

FIRE HYDRANTS CONT.

1. BLUE PAVEMENT REFLECTORS SHALL BE PLACED IN THE CENTERLINE OF THE DRIVING LANE CLOSEST TO AND DIRECTLY IN FRONT OF EACH FIRE HYDRANT.

2. A POST-CONSTRUCTION FIRE FLOW TEST SHALL BE CONDUCTED. HYDRANTS SHALL DELIVER THE REQUIRED GPM PER THE CITY OF CLERMONT LAND DEVELOPMENT REGULATIONS WITH A RESIDUAL PRESSURE OF 20 PSI. CONTRACTOR SHALL NOTIFY CITY OF CLERMONT ENGINEERING DEPARTMENT WHEN HYDRANTS ARE READY TO BE FLOW TESTED. FOR FIRE HYDRANTS LOCATED WITHIN THE CITY OF CLERMONT, CONNECTED TO THE CITY OF CLERMONT'S WATER SYSTEM, AND/OR LOCATED WITHIN CLERMONT FIRE DEPARTMENT'S PROTECTION AREA, THIS TEST SHALL BE CONDUCTED BY CITY OF CLERMONT PERSONNEL. THIS TEST SHALL BE PROVIDED BY THE CONTRACTOR FOR LOCATIONS NOT INCLUDED ABOVE. THIS TEST MAY BE WITNESSED BY THE OWNER/OPERATOR IF REQUESTED AT TIME OF NOTIFICATION THAT HYDRANTS ARE READY FOR FLOW TEST.

3. IF A PERMIT FOR THE WATER SYSTEM IS REQUIRED BY THE DEPARTMENT OF ENVIRONMENTAL PROTECTION (DEP), THE SYSTEM SHALL BE ACCEPTED AND APPROVED BY DEP PRIOR TO BEING PRESSURIZED OFF OF THE CITY SYSTEM AND PRIOR TO ANY FLOW TESTS BEING CONDUCTED.

4. FIRE HYDRANTS AND FIRE PROTECTION APPLIANCES SHALL BE KEPT ACCESSIBLE TO THE FIRE DEPARTMENT AT ALL TIMES. THE FOLLOWING CLEARANCES SHALL BE MAINTAINED FOR ALL FIRE HYDRANTS AND FIRE PROTECTION APPLIANCES. CLEARANCE OF SEVEN AND ONE-HALF FEET (7'-6") IN FRONT OF AND TO THE SIDES OF A FIRE HYDRANT, WITH A FOUR FOOT (4') CLEARANCE TO THE REAR OF THE HYDRANT. CLEARANCES OF SEVEN AND ONE-HALF FEET (7'-6") IN FRONT OF AND TO THE SIDES OF THE APPLIANCES. NO PERSON SHALL PLACE OR KEEP ANY POST, FENCE, VEHICLE, GROWTH, VEGETATION, TRASH OR STORAGE OF OTHER MATERIALS THAT WOULD OBSTRUCT A FIRE HYDRANT OR FIRE PROTECTION APPLIANCE AND HINDER OR PREVENT ITS IMMEDIATE USE BY FIRE DEPARTMENT PERSONNEL. SUCH FIRE HYDRANT OR FIRE PROTECTION APPLIANCE SHALL BE KEPT READILY VISIBLE AT ALL TIMES.

5. FIRE HYDRANTS SHALL NOT BE LOCATED CLOSER THAN THREE (3) FEET TO OR MORE THAN TWENTY (20) FEET FROM THE EDGE OF A STREET, DRIVE OR OTHER ACCESSWAY. UNLESS OTHERWISE REQUESTED BY THE FIRE OFFICIAL, THE 4-1/2" CONNECTION SHALL FACE THE NEAREST ROADWAY, OR IF LOCATED WITHIN A COMPLEX PARKING AREA, SHALL FACE THE NEAREST TRAFFIC WAY. NO HYDRANT SHALL BE INSTALLED WHERE PEDESTRIAN OR VEHICULAR TRAFFIC WOULD INTERFERE WITH THE USE OF THE HYDRANT. THE STANDARD FIRE HYDRANT APPROVED FOR USE IN THE CITY IS MUELLER MODEL A-423. THE CITY'S STANDARD FIRE HYDRANT DETAIL AND NOTES ARE AVAILABLE FROM THE CITY ENGINEER'S OFFICE AND MUST BE INCLUDED IN THE SITE PLANS. ALL FIRE HYDRANTS AND MAINS, INCLUDING THOSE PRIVATELY OWNED, THAT ARE CONNECTED TO THE CITY'S POTABLE WATER SYSTEM, SHALL CONFORM TO CITY STANDARDS.

6. A MINIMUM NUMBER OF FIRE HYDRANTS SHALL BE PROVIDED AND/OR AVAILABLE TO PROVIDE EQUAL TO OR GREATER THAN THE NEEDED FIRE FLOW FOR ALL BUILDINGS ON THE SITE BASED ON THE FOLLOWING CREDITS: HYDRANT(S) WITHIN 300 FEET OF THE BUILDING, 1,000 GPM CREDIT; HYDRANT(S) 301 TO 600 FEET, 670 GPM CREDIT; HYDRANT(S) 601 TO 1,000 FEET, 250 GPM CREDIT.

7. FIRE HYDRANTS THAT HAVE NOT BEEN TESTED AND PLACED INTO SERVICE MUST BE CLEARLY MARKED AS 'OUT OF SERVICE' USING INDUSTRY ACCEPTED METHODS (BAGGING, TAGGING, ETC).

CONNECTIONS TO CITY WATER MAINS

ALL DOUBLE DETECTOR CHECK VALVE ASSEMBLIES (DDCV) INSTALLED TO ISOLATE A PRIVATE FIRE SYSTEM SUPPLYING FIRE HYDRANTS FROM THE CITY'S POTABLE WATER SYSTEM SHALL HAVE TAMPER SWITCH DEVICES INSTALLED ON THE DDCV ASSEMBLY VALVES WHENEVER ANY AUTOMATIC FIRE SPRINKLER SYSTEM IS INSTALLED BEYOND THE DDCV. THESE TAMPER SWITCHES SHALL BE CONNECTED TO THE BUILDING FIRE ALARM SYSTEM FOR ALL INDIVIDUAL BUILDINGS PROTECTED BY A FIRE SPRINKLER SYSTEM.

FIRE DEPARTMENT CONNECTIONS

ANY FIRE DEPARTMENT CONNECTION SIAMESE (FDC) FOR FIRE SPRINKLER OR STANDPIPE SYSTEMS MUST BE WITHIN 100 FEET OF A FIRE HYDRANT. THE FDC MAY BE INSTALLED DIRECTLY ON THE DOUBLE DETECTOR CHECK VALVE BACK FLOW PREVENTOR AS LONG AS THE REQUIREMENT TO BE WITHIN 100 FEET OF A FIRE HYDRANT IS COMPLIED WITH. FIRE DEPARTMENT CONNECTIONS SHALL BE IDENTIFIED BY A SIGN THAT STATES, "NO PARKING FIRE DEPARTMENT CONNECTION" AND SHALL BE DESIGNED IN ACCORDANCE WITH FDOT STANDARDS FOR INFORMATION SIGNAGE. THE LOCATION OF ANY FDC MUST BE SHOWN ON THE SITE PLANS UTILITY SHEET.

DEDICATED FIRE MAINS

1. THE "POINT OF SERVICE" FOR ANY FIRE MAIN MUST BE CALLED OUT ON THE UTILITY SHEET OF THE SITE PLANS. THIS IS THE POINT WHERE A WATER LINE BECOMES DEDICATED TO ONLY FIRE PROTECTION, SUCH AS SUPPLYING ONLY A FIRE HYDRANT OR FIRE SPRINKLER SYSTEM, AND THERE IS NO POTABLE WATER SUPPLY COMING OFF OF THE WATER LINE BEYOND THIS POINT.
2. LABEL DEDICATED FIRE MAINS AT "FL" ON THE SUBMITTED PLANS.
3. FIRE MAINS WILL BE SEPARATELY PERMITTED AND INSPECTED BY THE CITY FIRE DEPARTMENT.

FIRE DEPARTMENT ACCESS

FIRE DEPARTMENT ACCESS ROADS SHALL BE PROVIDED AND MAINTAINED IN ACCORDANCE WITH THE FLORIDA FIRE PREVENTION CODE AND RULES ESTABLISHED BY THE CITY OF CLERMONT FOR EVERY FACILITY, BUILDING, OR PORTION OF A BUILDING HEREAFTER CONSTRUCTED OR RELOCATED. A FIRE DEPARTMENT ACCESS ROAD SHALL EXTEND TO WITHIN 50 FEET (15 m) OF AN EXTERIOR DOOR PROVIDING ACCESS TO THE INTERIOR OF THE BUILDING. FIRE DEPARTMENT ACCESS ROADS SHALL BE PROVIDED SUCH THAT IN ANY PORTION OF THE FACILITY OR ANY PORTION OF AN EXTERIOR WALL OF THE FIRST STORY OF A BUILDING IS LOCATED NOT MORE THAN 150 FEET (46 m) FROM FIRE DEPARTMENT ACCESS ROADS AS MEASURED BY A ROUTE APPROVED BY THE LOCAL FIRE OFFICIAL AROUND THE EXTERIOR OF THE BUILDING OR FACILITY (THE DISTANCE SHALL BE PERMITTED TO BE INCREASED TO 450 FEET WHEN BUILDINGS ARE PROTECTED WITH AN APPROVED AUTOMATIC FIRE SPRINKLER SYSTEM THAT IS INSTALLED IN ACCORDANCE WITH NFPA STANDARDS).

FIRE DEPARTMENT ACCESS ROADS SHALL HAVE AN UNOBSTRUCTED WIDTH OF NOT LESS THAN 20 FEET (6.1 m),

AN UNOBSTRUCTED VERTICAL CLEARANCE OF NOT LESS THAN 13 FEET 6 INCHES (4.1m), SHALL BE DESIGNED AND MAINTAINED TO SUPPORT THE IMPOSED LOADS OF FIRE APPARATUS (MINIMUM 32 TONS), AND SHALL BE PROVIDED WITH A SURFACE SUITABLE FOR ALL-WEATHER DRIVING CAPABILITIES. THE TURNING RADIUS OF A FIRE DEPARTMENT ACCESS ROAD SHALL BE AS APPROVED BY THE AHJ. DEAD-END FIRE DEPARTMENT ACCESS ROADS IN EXCESS OF 150 FEET (46 m) IN LENGTH SHALL BE PROVIDED WITH APPROVED PROVISIONS FOR THE TURNING AROUND OF FIRE APPARATUS. WHEN A BRIDGE IS REQUIRES TO BE USED AS PART OF FIRE DEPARTMENT ACCESS ROAD, IT SHALL BE CONSTRUCTED AND MAINTAINED IN ACCORDANCE WITH NATIONALLY RECOGNIZED STANDARDS. THE BRIDGE SHALL BE DESIGNED FOR A LIVE LOAD SUFFICIENT TO CARRY THE IMPOSED LOADS OF FIRE APPARATUS (MINIMUM 32 TONS). THE ANGLE OF APPROACH AND DEPARTURE FOR ANY MEANS OF FIRE DEPARTMENT ACCESS SHALL NOT EXCEED 1 FOOT DROP IN 20 FEET (0.3 m DROP IN 6 m), AND THE DESIGN LIMITATIONS OF THE FIRE APPARATUS OF THE FIRE DEPARTMENT SHALL BE SUBJECT TO APPROVAL BY THE AHJ. THE LOAD RATING OF FIRE DEPARTMENT ACCESS ROADS AND BRIDGES SERVING DETACHED ONE OR TWO-FAMILY OCCUPANSIES ONLY MAY BE DECREASED UPON APPROVAL BY THE LOCAL FIRE OFFICIAL.

THE REQUIRED WIDTH OF A FIRE DEPARTMENT ACCESS ROAD SHALL NOT BE OBSTRUCTED IN ANY MANNER, INCLUDING BY THE PARKING OF VEHICLES. MINIMUM REQUIRED WIDTHS AND CLEARANCES SHALL BE MAINTAINED AT ALL TIMES. ENTRANCES TO ROADS, TRAILS, OR OTHER ACCESSWAYS THAT HAVE BEEN CLOSED WITH GATES AND BARRIERS SHALL NOT BE OBSTRUCTED BY PARKED VEHICLES. FIRE LANE MARKINGS MUST BE INSTALLED IN ANY LOCATIONS WHERE VEHICLES MAY PARK AND BLOCK TRAFFIC WAYS OR FREE AND CLEAR ACCESS FOR FIRE AND EMERGENCY APPARATUS.

FIRE LANE MARKINGS ON THE PAVEMENT MUST BE IN DOT YELLOW OR RED AND INCLUDE A CROSSHATCH AREA THAT EXTENDS A MINIMUM OF THREE FEET OUT FROM THE CURB. ANY CURBS MUST ALSO BE PAINTED DOT YELLOW OR RED. MARKED TRAFFIC SURFACES MUST HAVE THE WORDS, FIRE LANE – NO PARKING, PAINTED ON THE SURFACE. THIS WORDING MUST REPEAT THE ENTIRE LENGTH OF THE FIRE LANE, AND BE SPACED NO MORE THAN 50 FEET APART. WORDING ON PAVED SURFACES MUST BE A MINIMUM OF 10" TALL. ANY REQUIRED FIRE LANES SHALL BE MARKED WITH SIGNS WITH THE WORDING, "NO PARKING FIRE LANE BY ORDER OF THE FIRE DEPARTMENT." SUCH SIGNS SHALL BE 12 INCHES BY 18 INCHES WITH A WHITE BACKGROUND AND RED LETTERS AND SHALL BE A MAXIMUM OF 7 FEET IN HEIGHT FROM THE ROADWAY TO THE BOTTOM PART OF THE SIGN. THE SIGNS SHALL BE WITHIN SIGHT OF THE TRAFFIC FLOW AND BE A MAXIMUM OF 50 FEET APART.

A 20' x 20' CROSS-HATCH AREA MUST BE INDICATED ON THE PAVEMENT IN FRONT OF AND CENTERED ON HYDRANTS ANY FIRE DEPARTMENT CONNECTIONS FOR FIRE SPRINKLER OR STANDPIPE SYSTEMS THAT ARE LOCATED ON BUILDINGS OR IN PARKING LOTS WHERE VEHICLES MAY PARK AND BLOCK CLEAR ACCESS TO THE CONNECTION. THE CROSS-HATCH AREA MUST INCLUDE WORDING AS SPECIFIED ABOVE. A SIGN INDICATING "NO PARKING FIRE DEPARTMENT CONNECTION" MUST BE INSTALLED IN THIS AREA.

THE CURB MUST BE PAINTED DOT YELLOW OR RED, FOR A LENGTH OF 30 FEET CENTERED ON ANY FIRE OR FIRE DEPARTMENT SIAMESE CONNECTIONS THAT ARE INSTALLED ALONG A PARKING LOT, DRIVE OR STREET TO PREVENT VEHICLES FROM PARKING WITHIN 15 FEET OF THE HYDRANT OR CONNECTION. WORDING MUST BE PAINTED ON CURBS IN THESE AREAS INDICATING "NO PARKING FIRE LANE" AND MUST BE A MINIMUM OF 3" TALL.

BUILDING MARKINGS

ADDRESS NUMERALS SHALL NOT BE LESS THAN THREE INCHES IN HEIGHT FOR RESIDENTIAL BUILDINGS, STRUCTURES OR PORTIONS THEREOF, AND AT LEAST SIX INCHES IN HEIGHT FOR ALL OTHER BUILDINGS, STRUCTURES OR PORTIONS THEREOF. ADDRESS NUMERALS SHALL BE ARABIC NUMERALS OR ALPHABET LETTERS, NO CURSIVE LETTERS.

COMMERCIAL BUILDINGS

"KEY LOCK BOX APPROVED BY A CITY FIRE OFFICIAL" WILL BE REQUIRED ON ALL COMMERCIAL BUILDINGS (NFPA 1, CODE CHAPTER 3-6 AS ADAPTED IN THE FLORIDA FIRE PREVENTION CODE THROUGH FLORIDA ADMINISTRATIRVE CHAPTER 4A-60.003, RULES OF THE STATE FIRE MARSHAL, AND AUTHORIZED BY FLORIDA STATUTES 633.0215, 633.025). THESE SHALL BE INSTALLED ON THE EXTERIOR WALL OF THE BUILDING WITHIN ONE FOOT OF THE LEFT SIDE OF THE MAIN PUBLIC ENTRANCE DOOR AT A HEIGHT OF SIX (6) FEET. IN THE CASE OF A MULTI-OCCUPANCY BUILDING, SUCH AS A ROW OF STORES, MULTI-OFFICE BUILDING, ETC., ONLY ONE KEY LOCK BOX PER BUILDING WILL BE REQUIRED UNLESS EXTENUATING CIRCUMSTANCES INDICATE THE NEED FOR ADDITIONAL LOCK BOXES. THIS BOX SHALL BE INSTALLED ON THE EXTERIOR WALL OF THE BUILDING WITHIN ONE FOOT OF THE LEFT END OF THE SIDE OF THE BUILDING CONTAINING THE MAIN PUBLIC ENTRANCE (AS YOU ARE FACING THE MAIN ENTRANCE) AT A HEIGHT OF SIX (6) FEET. IN THE CASE OF A MULTI-FAMILY COMPLEX, ONLY ONE KEY LOCK BOX WILL BE REQUIRED FOR THE COMPLEX UNLESS EXTENUATING CIRCUMSTANCES INDICATE THE NEED FOR ADDITIONAL KEY LOCK BOXES. THIS BOX SHALL BE LOCATED AT THE MAIN ENTRANCE TO THE CLUBHOUSE, INSTALLED AS INDICATED ABOVE FOR COMMERCIAL BUILDINGS. IF THERE IS NO CLUBHOUSE, THE BOX SHALL BE INSTALLED PER A CITY FIRE OFFICIAL. A CITY FIRE OFFICIAL MAY BE CONTACTED IF IT IS NOT POSSIBLE TO INSTALL THE BOX AT THE LOCATIONS INDICATED ABOVE. THE CITY FIRE OFFICIAL WILL MAKE A DETERMINATION AS TO THE LOCATION WHERE THE BOX WILL BE INSTALLED.

LOCK BOXES SHALL CONTAIN KEYS TO THE BUILDING (INCLUDING ENTRANCE DOORS AND ALL ELECTRICAL AND MECHANICAL ROOMS) AND ANY SYSTEMS IN THE BUILDING (SUCH AS FIRE ALARM PANELS, FIRE ALARM PULL STATIONS, SMOKE DETECTOR RESET, SPRINKLER SYSTEMS, ELEVATORS, ETC.). BOXES FOR MULTI-OCCUPANCY BUILDINGS AND MULTI-FAMILY COMPLEXES SHALL BE OF SUFFICIENT SIZE TO ACCOMMODATE KEYS FOR EACH INDIVIDUAL OCCUPANCY AND MASTER KEYS FOR EACH SEPARATE BUILDING, AS WELL AS ANY SYSTEMS IN ALL OCCUPANCIES AND BUILDINGS. ALL LOCK BOXES SHALL ALSO CONTAIN BUSINESS CARDS WITH AFTER-HOURS EMERGENCY CONTACT NUMBERS FOR EACH OCCUPANCY. THE CODE(S) FOR SILENCING AND RESETTING ANY FIRE ALARM SYSTEMS SHALL BE WRITTEN ON THE BACK OF THE BUSINESS CARD(S) FOR EACH OCCUPANCY.

APPLICATIONS FOR THE PURCHASE OF "KEY LOCK BOX" EQUIPMENT ARE AVAILABLE FROM THE FIRE DEPARTMENT. EACH BOX TO BE INSTALLED WITHIN THE CITY OF CLERMONT WILL BE KEYED TO ACCOMMODATE CLERMONT FIRE DEPARTMENT'S LOCK BOX KEY. BUILDING OWNERS OR OCCUPANTS WILL NOT HAVE A KEY TO THE BOX. THE OWNER OR DEVELOPER SHALL NOTIFY THE FIRE DEPARTMENT (352-394-7662) AFTER THE BOX HAS BEEN INSTALLED AND ALL REQUIRED KEYS ARE AVAILABLE. A FIRE DEPARTMENT REPRESENTATIVE WILL MEET A REPRESENTATIVE OF THE BUILDING AT THE SITE TO LOCK THE KEYS IN THE BOX. WHENEVER ANY KEYS, CODES OR EMERGENCY CONTACT NUMBERS ARE CHANGED, THE FIRE DEPARTMENT SHALL BE NOTIFIED IMMEDIATELY SO A FIRE DEPARTMENT REPRESENTATIVE CAN UNLOCK THE BOX AND REPLACE THE CHANGED ITEMS.

BUILDING MATERIALS

NFPA 241 (STANDARD FOR SAFEGUARDING CONSTRUCTION, ALTERATION AND DEMOLITION OPERATIONS) AS ADAPTED IN THE FLORIDA ADMINISTRATIVE CODE (RULES OF THE STATE FIRE MARSHALL) AND THE FLORIDA FIRE PREVENTION CODE, AND AUTHORIZED BY FLORIDA STATE STATUTES, CHAPTER 633, REQUIRES THAT A WATER SUPPLY FOR FIRE PROTECTION SHALL BE MADE AVAILABLE AS SOON AS COMBUSTIBLE MATERIAL ACCUMULATES ON THE SITE AND THAT THERE SHALL BE NO DELAY IN THE INSTALLATION OF FIRE PROTECTION EQUIPMENT. THIS SECTION ALSO STATES, "WHERE UNDERGROUND WATER MAINS AND HYDRANTS ARE TO BE PROVIDED, THEY SHALL BE INSTALLED, COMPLETED AND IN SERVICE PRIOR TO CONSTRUCTION WORK.

EMERGENCY VEHICLE ACCESS CONTROL (EVAC) SYSTEM

THE CITY OF CLERMONT LAND DEVELOPMENT REGULATIONS, SECTION 110-192 (1), REQUIRES THAT ALL GATED COMMUNITIES IN THE CITY OF CLERMONT INSTALL THE "EVAC" (EMERGENCY VEHICLE ACCESS CONTROL) REMOTE GATE OPENING EQUIPMENT ON ALL ENTRY GATES. tHE EVAC SYSTEM SHALL BE IN ADDITION, AND SEPARATE, FROM THE GATE OPENING SYSTEM THAT IS PROVIDED FOR THE RESIDENTS. A KEYPAD CODE ENTRY DEVICE SHALL ALSO BE INSTALLED AT EACH GATE, WITH THE ENTRY CODE SUPPLIED TO THE FIRE DEPARTMENT IN WRITING UPON INSTALLATION. THE DEVELOPER SHALL PROVIDE FIVE (5) CONTROLLERS FOR THE EVAC SYSTEM TO THE CLERMONT FIRE DEPARTMENT. FOR FURTHER REQUIREMENTS REFER TO THE CITY OF CLERMONT LAND DEVELOPMENT REGULATIONS, SECTION 110-192 (1). SECURITY ACCESS CONTROL, 800-637-5945, DISTRIBUTES THE EVAC SYSTEM. SECURITY ACCESS CONTROL MAY BE CONTACTED REGARDING ANY QUESTIONS ABOUT THE SYSTEM OR TO GET INFORMATION ON LOCAL VENDORS THAT CAN INSTALL THE SYSTEM.

NEEDED FIRE FLOW CALCULATIONS

NEEDED FIRE FLOW CALCULATIONS FOR ALL BUILDINGS ON THE SITE BASED ON THE ISO FIRE SUPPRESSION RATING SCHEDULE GUIDE FOR NEEDED FIRE FLOW CALCULATIONS SHALL BE SHOWN ON THE SITE PLANS. THE INSURANCE SERVICES OFFICE (ISO) GUIDE FOR CALCULATING THE NEEDED FIRE FLOW CAN BE FOUND ON THE ISO WEB SITE AT http://www.isomitigation.com/downloads/ppc3001.pdf. THE FIRE FLOW CALCULATIONS ARE BASED ON A NON-SPRINKLERED BUILDING. BUILDINGS PROTECTED BY AN AUTOMATIC FIRE SPRINKLER SYSTEM ARE THEN GIVEN CREDIT BASED ON 50% OF NEEDED FIRE FLOW PLUS SPRINKLER SYSTEM REQUIREMENTS. THIS CALCULATION IS USED AS ONE OF THE FACTORS IN DETERMINING THE NUMBER OF FIRE HYDRANTS REQUIRED ON THE SITE.

A NEEDED FIRE FLOW CALCULATION WORKSHEET IS AVAILABLE IN MS EXCEL FORMAT AT THE CITY OF CLERMONT WEB SITE: www.cityofclermontfl.com, CITY DEPARTMENTS, FIRE DEPARTMENT, INSPECTIONS/PREVENTION.

GENERAL NOTES AND DETAILS
REVISED
12-8-2015

DATE	REVISIONS	NO.

DESIGN XXX | DRAWN XXX | DATE XXX

CITY OF CLERMONT GENERAL NOTES

CITY OF CLERMONT
685 WEST MONTROSE STREET
P.O. BOX 120219
CLERMONT, FLORIDA 34711
PHONE: (352) 241-7335

SIGNATURE AND SEAL

DRAWING FILE

DRAWING
GN2

SHEET OF

RESIDENTIAL
FOR CITY COLLECTORS AND
LOCAL ROADS

SPECIFICATIONS:

BASE METAL:
THE BASE METAL SUBSTRATE SHALL BE SHEET ALUMINUM ALLOY 5052–H38. THE THICKNESS OF THE ALUMINUM SHALL BE 0.080".

BLADE SIZE:
BLADE SIZE SHALL BE 9".

REFLECTIVE SHEETING:
ALL STREET NAME SIGNS AND ALL OTHER SIGN FACES SHALL BE MADE FROM 3M HIGH INTENSITY PRISMATIC SHEETING MEETING ASTM TYPE .

FINISH:
EACH ALUMINUM SHEET AND/OR PRE–CUT SIGN BLANK SHALL BE ALODIZED WITH ALODINE 1200,
CHROMATE 5015 OR EQUAL, USING THE "POWER SPRAY 7 – STEP METHOD". THE CHEMICAL CONVERSION TREATMENT SHALL IMPART A GOLDEN DISCOLORATION TO THE ALUMINUM.
ONLY THOSE CHEMICAL CONVERSION TREATMENTS WHICH HAVE BEEN QUALIFIED UNDER U.S. SPECIFICATION MIL–C–5541B OR ASTM B449–67, CLASS I OR II MAY BE EMPLOYED AND THE
PROCESSING CYCLE SHALL CONSIST OF:
OPERATION NO. 1 – CLEANING: A LIQUID ETCHING TYPE ALKALINE CLEANER, SIC TECHNOLOGIES
CLEANER 3351 OR EQUAL, MUST BE USED PER MANUFACTURER'S RECOMMENDATIONS.
OPERATION NO. 2 – RINSE: AN OVERFLOWING WATER RINSE SHALL BE USED.
OPERATION NO. 3 – DEOXIDIZE: SIC TECHNOLOGIES DESMUT 1012 OR EQUAL SHALL BE USED TO DESMUT AND REMOVE HEAT TREATMENT AND RESIDUAL OXIDES REMAINING ON METAL.
OPERATION NO. 4 – RINSE: AN OVERFLOWING WATER RINSE SHALL BE USED.
OPERATION NO. 5 – CHEMICAL CONVERSION TREATMENT: A CHEMICAL CONVERSION TREATMENT
(ALODINE 1200, CHROMATE 5015 OR EQUAL) SHALL BE UTILIZED TO PRODUCE A PROTECTIVE GOLDEN COATING.
OPERATION NO. 6 – RINSE: AN OVERFLOWING WATER RINSE SHALL BE USED.
OPERATION NO. 7 – DRYING: A FORCED, HOT AIR DRYING PROCESS SHALL BE USED.

COLORS AND FONT:
REFER TO BRANDING STANDARDS MANUAL.

MESSAGE LENGTH:
THE LENGTH OF THE MESSAGE WILL BE DEPENDENT UPON THE NAME LENGTH PLUS ITS SUFFIX, BUT SHALL BE IN MULTIPLES OF SIX INCHES. SIGNS SHALL HAVE AN OVERALL LENGTH OF NOT LESS THAN 36".

AS MANUFACTURED BY VULCAN SIGNS OR EQUAL. P.O. BOX 1850 FOLEY, AL 36535
1–800–633–6845

DESIGN APPROVAL:
STREET NAME SIGN LAYOUT REQUIRES ENGINEERING APPROVAL PRIOR TO FABRICATION.

STREET SIGN DETAIL
NOT TO SCALE

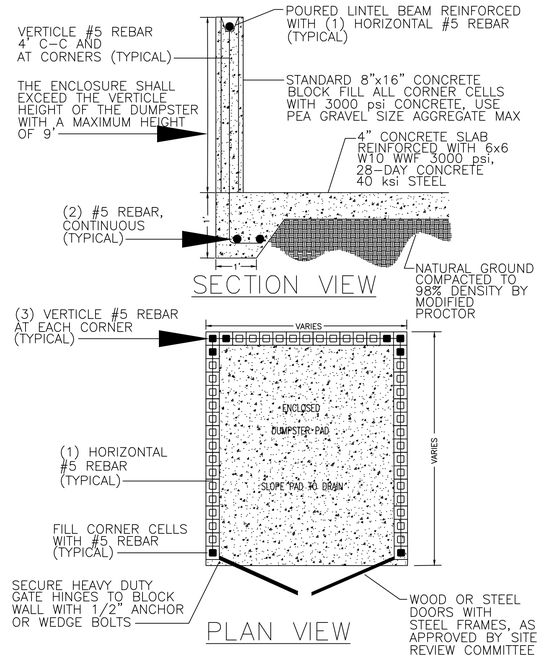

DUMPSTER DETAIL
NOT TO SCALE

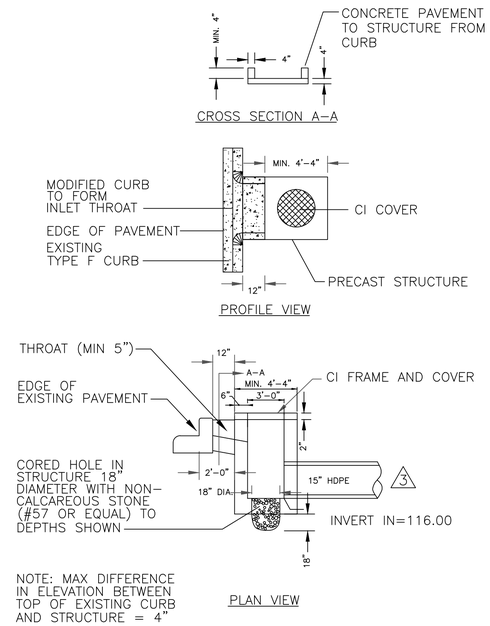

OUTFALL STRUCTURE
NOT TO SCALE

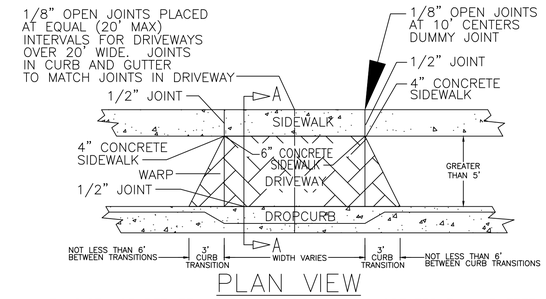

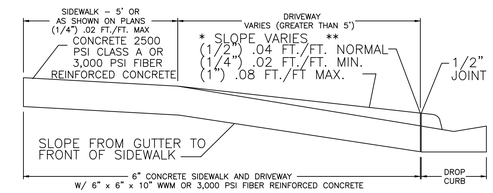

SECTION A–A

* SLOPES CAN BE ADJUSTED WITHIN THE RANGES SHOWN TO IMPROVE TIES TO ADJACENT PROPERTY AND ARE TO BE TRANSITIONED TO AVOID DISTORTION BE TRANSITIONED TO AVOID DISTORTION IN SIDEWALK CONTINUITY
** SPECIAL PERMISSION MAY BE OBTAINED TO INCREASE OR DECREASE SLOPE OF DRIVEWAY TO IMPROVE TIES TO SIDEWALL AND GUTTER GRADE
NOTE: DRIVEWAYS AND SIDEWALKS THROUGH DRIVEWAYS SHALL REQUIRE 6" x 6" REINFORCEMENT WIRE OR 3,000 PSI FIBER REINFORCED CONCRETE.

CHECK AND VERIFY THESE ITEMS:
- ☐ 6" W/WIRE
- ☐ 3' TAPER CUT SQUARE
- ☐ 5' SIDEWALK TO R/W

* SLOPE VARIES **
- ☐ (1/2") .04 FT./FT. NORMAL
- (1/4") .02 FT./FT. MIN.
- (3/4") .06 FT./FT MAX.

SIDEWALK AND PAVED DRIVEWAY CONSTRUCTION
NOT TO SCALE

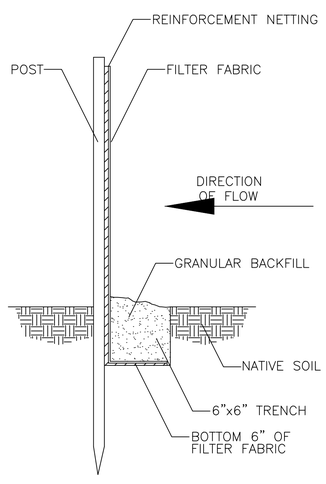

SILT BARRIER DETAIL
NOT TO SCALE

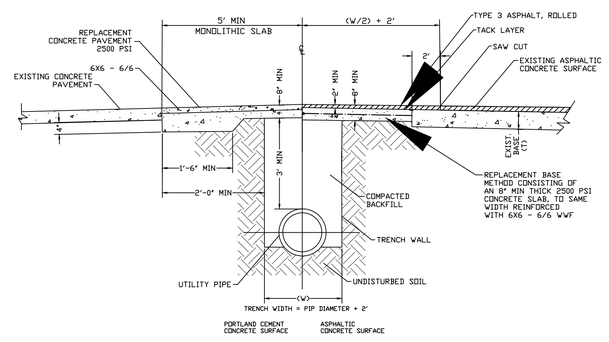

STANDARD ROADWAY OPEN CUT DETAIL
NOT TO SCALE

THE USE OF AN OPEN CUT SHALL BE PRE–APPROVED BY CITY ENGINEER.

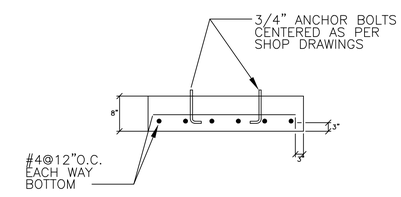

GENERATOR SLAB DETAIL
NOT TO SCALE

NO.	REVISIONS	DATE

DESIGN XXX
DRAWN XXX
DATE XXX

CITY OF CLERMONT
STANDARD DETAILS

CITY OF CLERMONT
685 WEST MONTROSE STREET
P.O. BOX 120219
CLERMONT, FLORIDA 34711
PHONE: (352) 241–7335

SIGNATURE AND SEAL

DRAWING FILE

DRAWING
D1

SHEET OF

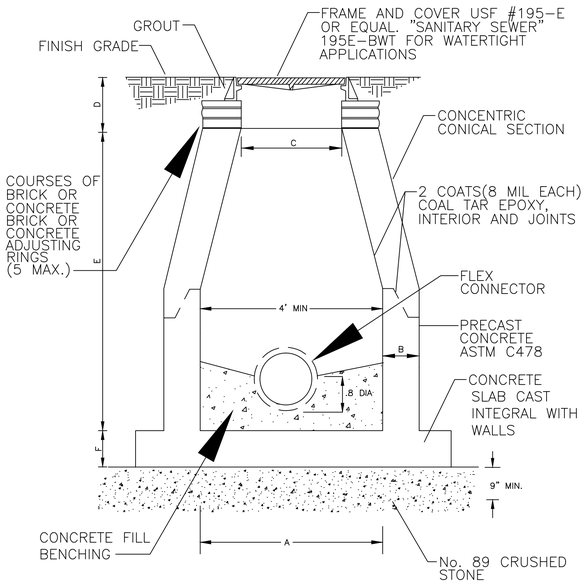

NOTES:

1. PRECAST CONCRETE SHALL BE TYPE 2 CEMENT 4000 PSI
2. LIFT HOLES NOT PERMITTED THROUGH PRECAST SECTIONS.
3. ALL OPENINGS SHALL BE SEALED WITH NON-SHRINK GROUT.
4. INSTALL FLOW CHANNEL INSIDE MANHOLES.
5. SERVICE LATERALS SHALL GENERALLY NOT BE PERMITTED DIRECTLY INTO MANHOLES.
6. PLACE TWO HALF-MOON SHAPED PLYWOOD (3/8"THICK MIN.) IN BOTTOM OF MANHOLE AFTER PIPES HAVE BEEN CONNECTED TO KEEP DEBRIS FROM ENTERING SEWER.
7. REINFORCING STEEL PER ASTM C478-88a.
8. PROVIDE 5' x 5' x 12" CONCRETE COLLAR AROUND COVER FRAME, W/4 #4 BARS E.W., IN UNPAVED AREAS.
9. MANHOLES RECEIVING DIRECT FORCE MAIN FLOW SHALL BE CONSTRUCTED WITH A HIGH DENSITY POLYETHYLENE LINER CAST IN DURING CONSTRUCTION THIS LINER SHALL BE AGRU SURE GRIP, OR EQUAL APPROVED BY THE CITY OF CLERMONT.

M.H. DEPTH	A*	B	C	D	E	F
UP TO 12'	48"	5"	24"	15"	AS-REQ'D	8"
12' - 18'	60"	8"	24"	15"	AS-REQ'D	10"
18' & DEEPER	72"	8"	24"	15"	AS-REQ'D	14"

MANHOLE SIZE:
UP TO 24" PIPE = 48"/0, UPTO 36" PIPE = 60"/0,
OVER 36" PIPE = 72"/0

*ENTIRE DEPTH EXCEPT CONE

STANDARD MANHOLE DETAIL

NOT TO SCALE

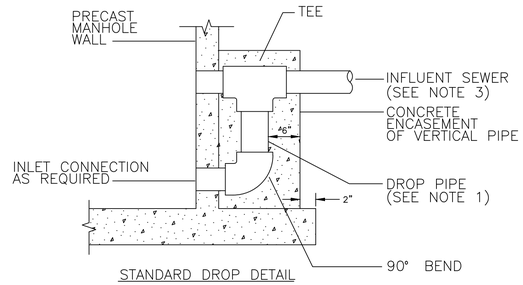

STANDARD DROP DETAIL

NOTES:

1. DROP PIPE AND FITTINGS SHALL BE OF EQUAL SIZE AND MATERIAL AS THE INFLUENT SEWER.
2. THE CITY MAY APPROVE ALTERNATE WATER TIGHT CONNECTION DETAILS FOR CONNECTION OF 24" DIAMETER PIPES AND LARGER.
3. AN OUTSIDE DROP CONNECTION SHALL BE REQUIRED FOR ALL INFLUENT PIPES WHICH HAVE AN INVERT 2' OR MORE ABOVE THE MANHOLE INVERT.

MANHOLE CONNECTION DETAILS

NOT TO SCALE

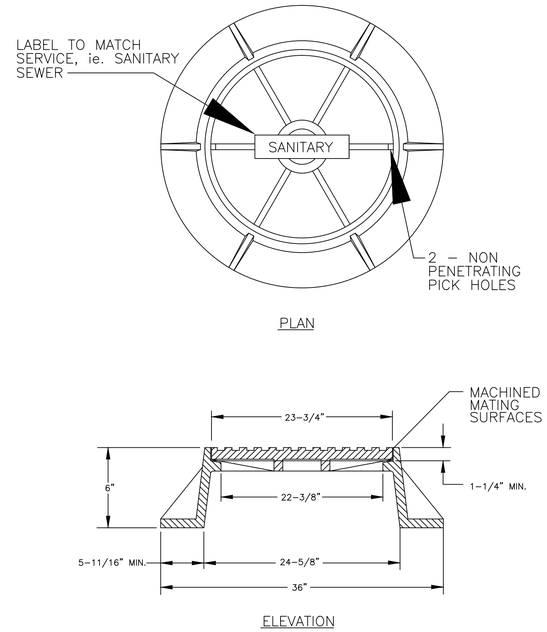

STANDARD MANHOLE FRAME AND COVER

NOT TO SCALE

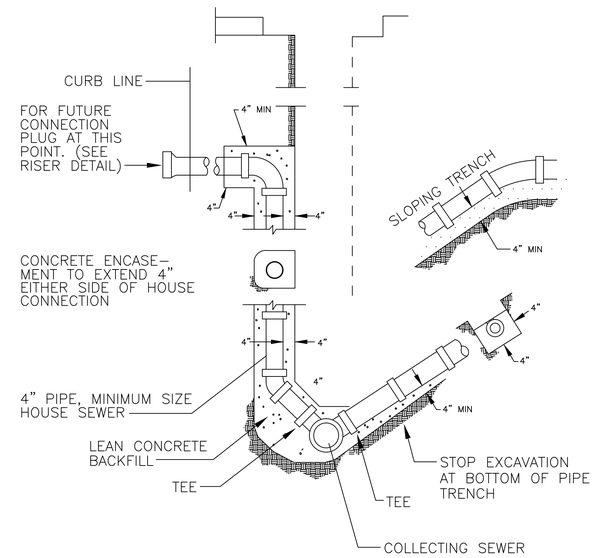

SERVICE CONNECTION FOR DEEP SEWER

NOT TO SCALE

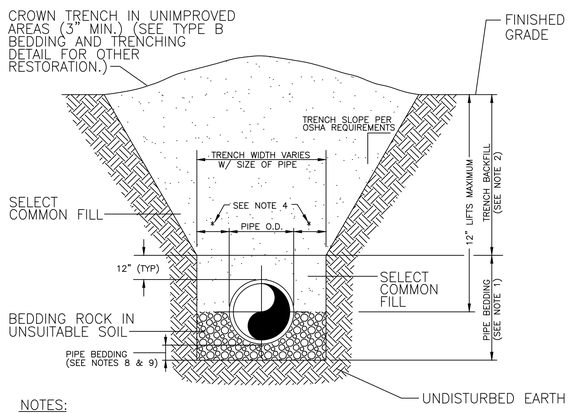

NOTES:

1. PIPE BEDDING: SELECT COMMON FILL COMPACTED TO 95% OF THE MAXIMUM DENSITY AS PER AASHTO T-180.
2. TRENCH BACKFILL: COMMON FILL COMPACTED TO 95% OF THE MAXIMUM DENSITY AS PER AASHTO T-180.
3. USE TYPE A BEDDING TO BE DETERMINED IN THE FIELD AS DIRECTED BY THE CITY OF CLERMONT.
4. (*): 15" MAX. FOR PIPE DIAMETER LESS THAN 24", AND 24" MAX. FOR PIPE DIAMETER 24" AND LARGER.
5. WATER SHALL NOT BE PERMITTED IN THE TRENCH DURING CONSTRUCTION.
6. ALL PIPE TO BE INSTALLED WITH BELL FACING UPSTREAM TO THE DIRECTION OF THE FLOW.
7. SHEETING AND BRACING SHALL BE USED IN ACCORDANCE WITH CURRENT TRENCHING REGULATIONS AND WHERE UNSAFE CONDITIONS EXIST.
8. GRAVITY SEWERS SHALL UTILIZE TYPE A BEDDING, IF REQUIRED BY THE ENGINEER. BEDDING DEPTH SHALL BE 4" MINIMUM FOR PIPE DIAMETER LESS THAN 15", AND 6" MINIMUM FOR PIPE DIAMETER 16" AND LARGER.
9. DEPTH FOR REMOVAL OF UNSUITABLE MATERIAL SHALL GOVERN DEPTH OF BEDDING ROCK BELOW THE PIPE. CITY OF CLERMONT SHALL DETERMINE IN THE FIELD REQUIRED REMOVAL OF UNSUITABLE MATERIAL TO REACH SUITABLE FOUNDATION.

TYPE A BEDDING AND TRENCHING DETAIL

NOT TO SCALE

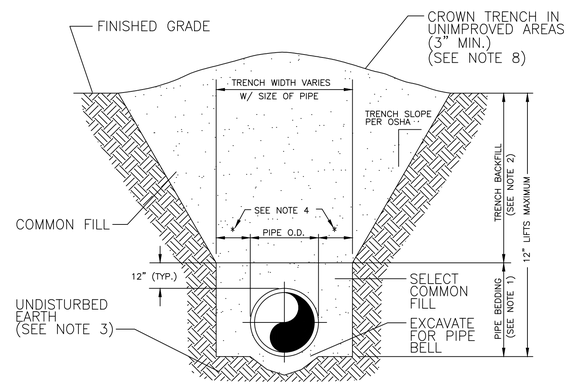

NOTES:

1. PIPE BEDDING: SELECT COMMON FILL COMPACTED TO 95% OF THE MAXIMUM DENSITY AS PER AASHTO T-180.
2. TRENCH BACKFILL: COMMON FILL COMPACTED TO 95% OF THE MAXIMUM DENSITY AS PER AASHTO T-180.
3. PIPE BEDDING UTILIZING SELECT COMMON FILL OR BEDDING ROCK IN ACCORDANCE WITH TYPE A BEDDING AND TRENCHING DETAIL MAY BE REQUIRED AS DIRECTED BY THE ENGINEER.
4. (*): 15" MAX. FOR PIPE DIAMETER LESS THAN 24", AND 24" MAX. FOR PIPE DIAMETER 24" AND LARGER.
5. WATER SHALL NOT BE PERMITTED IN THE TRENCH DURING CONSTRUCTION.
6. ALL PIPE TO BE INSTALLED WITH BELL FACING UPSTREAM TO THE DIRECTION OF THE FLOW.
7. SHEETING AND BRACING SHALL BE USED IN ACCORDANCE WITH CURRENT TRENCHING REGULATIONS AND WHERE UNSAFE CONDITIONS EXIST.
8. FINAL RESTORATION IN IMPROVED AREAS SHALL BE IN COMPLIANCE WITH ALL APPLICABLE REGULATIONS OF GOVERNING AGENCIES. SURFACE RESTORATION WITHIN CITY OF CLERMONT RIGHT-OF-WAY SHALL COMPLY WITH REQUIREMENTS OF RIGHT-OF-WAY UTILIZATION REGULATIONS AND ROAD CONSTRUCTION SPECIFICATIONS.

TYPE B BEDDING AND TRENCHING DETAIL

NOT TO SCALE

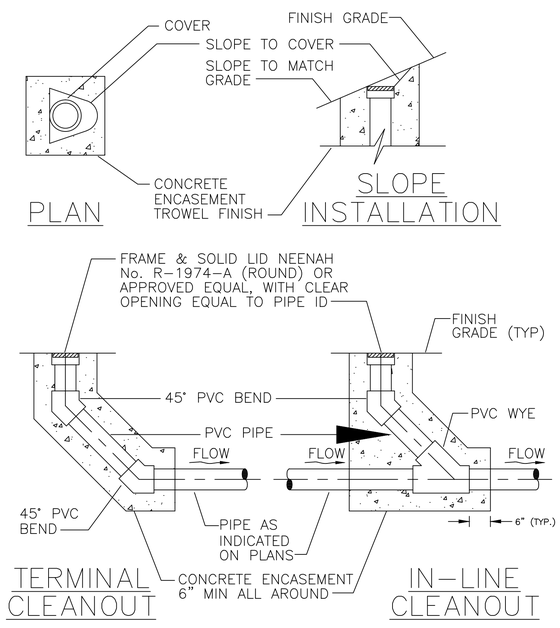

CLEANOUT DETAIL IN PAVED AREAS

NO.	REVISIONS	DATE

DESIGN XXX
DRAWN XXX
DATE XXX

CITY OF CLERMONT
STANDARD DETAILS

CITY OF CLERMONT
685 WEST MONTROSE STREET
P.O. BOX 120219
CLERMONT, FLORIDA 34711
PHONE: (352) 241-7335

SIGNATURE AND SEAL

DRAWING FILE

DRAWING D2

SHEET OF

NOTES:

1. LOCATE SINGLE LATERAL AS CLOSE TO LOT LINE AS POSSIBLE.
2. SERVICE LATERALS SHALL BE 6" MINIMUM DIAMETER FOR SINGLE SERVICE.
3. BENDS SHALL BE 45° MAXIMUM.
4. RECONNECT EXISTING SERVICES.
5. LENGTH OF SERVICE LATERALS SHALL BE 150' OR LESS.
6. ALL MAINS, FITTINGS, AND APPURTENANCES, SHALL BE SDR 26

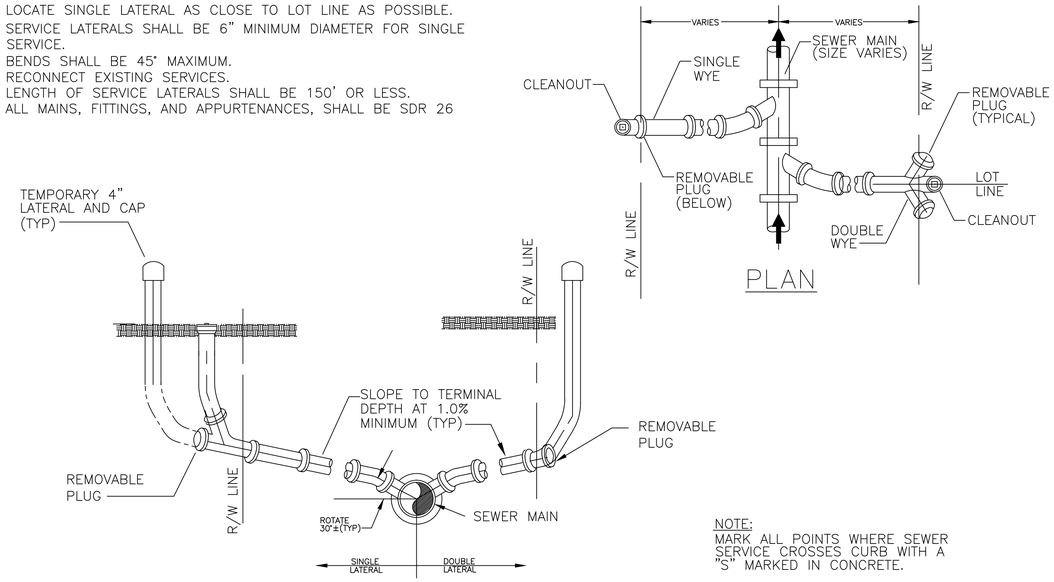

NOTE:
MARK ALL POINTS WHERE SEWER SERVICE CROSSES CURB WITH A "S" MARKED IN CONCRETE.

SEWER SERVICE RISER CONNECTION DETAILS

NOT TO SCALE

STANDARD FEATURES:

- ALUMINUM "I" BAR CONSTRUCTION
- ALL T-316 STAINLESS STEEL HARDWARE
- LOCKABLE WITH OWNER-SUPPLIED PADLOCK
- HINGED WITH POSITIVE LATCH TO MAINTAIN UPRIGHT POSITION
- LOAD RATED CONSISTENT WITH ACCESS COVER
- VIEW AREA FOR OBSERVATION AND LIMITED MAINTENANCE
- SAFETY ORANGE POWDER-COATED FINISH
- NUTRAIL W/S.STL. SPRING NUTS (300 LBS. PSF [1464 KG. PER METER] LOADED DOORS ONLY)
- LIFETIME GUARANTEE

APPLICATIONS:

THE OPTIONAL PROTECTIVE GRATING PANEL SHOULD BE SPECIFIED FOR APPLICATIONS IN AREAS THAT REQUIRE ADDITIONAL PROTECTION SHOULD THE ACCESS COVER BE LEFT IN THE OPEN POSITION. THIS OPTION SHOULD ALSO BE CONSIDERED WHEN A SINGLE PERSON INSPECTION OF WET WELLS IS DESIRABLE. THE GRATING PANEL HAS PROVISIONS FOR AN OWNER-SUPPLIED PADLOCK THAT WOULD PROVIDE SECONDARY PROTECTION AGAINST UNAUTHORIZED PERSONNEL OPENING THE ACCESS COVER. THIS OPTION IS NOT AVAILABLE FOR ALL ACCESS COVERS MODELS. PLEASE CONSULT THE FACTORY.

HALLIDAY PRODUCTS OPTIONAL PROTECTIVE GRATING PANEL IS EQUIPPED WITH ALL T-316 STAINLESS STEEL HARDWARE. THIS LOCKABLE GRATING PANEL CAN BE FACTORY INSTALLED ON MOST MODELS IN OUR EXTENSIVE LINE OF QUALITY ACCESS COVERS. EACH GRATING PANEL IS POWDER COAT FINISHED IN SAFETY ORANGE COLOR, AND IS EQUIPPED WITH A T-316 STAINLESS STEEL POSITIVE LATCH WITH RELEASE HANDLE THAT SECURES THE GRATING PANEL IN THE OPEN POSITION. THE GRATING SUPPORT LEDGES FEATURE BUILT-IN NUTRAIL. EACH UNIT IS SUPPLIED WITH FOUR STAINLESS STEEL SPRING NUTS USED TO MOUNT PUMP BRACKETS AND CABLE HOLDERS.

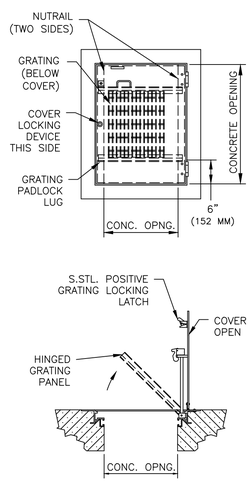

FALL PREVENTION GRATING

NOT TO SCALE

General Water Notes

1. WATER SYSTEM COMPONENTS SHALL BE INSTALLED IN STRICT ACCORDANCE WITH ALL LOCAL CODES AND REGULATIONS, CLEANED, DISINFECTED AND BACTERIOLOGICALLY CLEARED FOR SERVICE IN ACCORDANCE WITH THE LATEST AWWA STANDARDS AND CHAPTER 62-555 FLORIDA ADMINISTRATIVE CODE.
2. ALL PIPING SHALL BEAR THE "NSF" SEAL FOR POTABLE WATER.
3. WATER MAINS SHALL BE PVC CONFORMING TO AWWA C-900, DR 18 FOR PIPE SIZES 4"-12". PIPES 14" OR LARGER SHALL BE AWWA C-905, DR 18. ALL COUPLINGS, CLEANING COMPOUNDS, SOLVENTS, LUBRICANTS, AND PIPE PREPARATION, FOR LAYING, SHALL BE IN ACCORDANCE WITH THE PIPE MANUFACTURERS LATEST RECOMMENDATIONS.
4. DEPTH OF WATER LINES TO BE 36" MINIMUM COVER FROM FINISH GRADE.
5. WATER MAINS TO BE LOCATED 6.00' FROM BACK OF CURB OR EDGE OF PAVEMENT UNLESS OTHERWISE NOTED.
6. ALL SLEEVES UNDER PAVEMENT SHALL EXTEND 5' BEYOND THE BACK OF CURB.
7. DISINFECTING: FOLLOWING THE PRESSURE TESTING, THE CONTRACTOR SHALL DISINFECT ALL SECTIONS OF THE WATER DISTRIBUTION SYSTEM. DISINFECTION SHALL BE IN ACCORDANCE WITH THE APPLICABLE PROVISIONS OF AWWA STANDARD C651 "DISINFECTING WATER MAINS", AND ALL APPROPRIATE AGENCY APPROVAL.
8. ALL HYDROSTATIC TEST SHALL BE IN ACCORDANCE WITH AWWA C600 FOR DUCTILE IRON PIPE AND C605/M23 FOR PVC PIPE.
9. ALL WATER MAINS SHALL BE INSTALLED, PRESSURE AND LEAK TESTED IN ACCORDANCE WITH AWWA C600, (62-555.320(21)(b)1 AND 62-555.330, F.A.C. ALL INSTALLATION, TESTING AND FIELD PROCEDURES MUST BE PROVIDED AND MUST CONFORM TO THE APPLICABLE AWWA STANDARDS.
10. ALL PIPING MATERIALS AND SPECIFICATIONS COVERING PIPES, JOINTS AND PACKING MATERIALS, INTERNAL COATING AND LININGS, FITTINGS, SPECIALS AND APPURTENANCES SHALL ALL BE IN ACCORDANCE WITH THE CORRESPONDING AWWA STANDARDS AND BE CONFORMING TO NSF REQUIREMENTS, AS MAY BE APPLICABLE, WITH EXCEPTIONS ALLOWED ONLY IF DOCUMENTATION AND ASSURANCES ARE PROVIDED IN COMPLIANCE WITH PARAGRAPHS 62-555.320(3) (d) 62-555.320 (3) (b), AND 62-555.320 (21) (c), F.A.C. THE LEAD USE PROHIBITION IN RULE 62-555.322, F.A.C. SHALL ALSO APPLY. POLYETHYLENE TUBING SHALL BE PER AWWA C901. UNDERGROUND SERVICE LINES, AND VALVES SHALL BE PER AWWA C800.

COLOR CODING

All water main pope, including fittings, installed on or after August 28, 2003, except pipe installed under a construction permit for which the Department received a complete application before August 28, 2003, shall be color coded or marked using blue as a predominate color to differentiate drinking water from reclaimed or other water. Under-ground plastic pipe shall be solid-wall blue pipe, shall have a co-extruded blue external skin, or shall be white or black pipe with blue stripes incorporated into, or applied to, the pipe wall; and underground metal or concrete pipe shall have blue stripes applied to the pipe wall. Pipe striped during manufacturing of the pipe shall have continuous stripes that run parallel to the axis of the pipe, that are located at no greater than 90° intervals around the pipe, and will remain intact during and after installation of the pipe. If tape or paint is used to stripe pipe during installation of the pipe, the tape or paint shall be applied in a continuous line that runs parallel to the axis of the pipe and that is located along the top of the pipe; for pipes with an internal diameter of 24 inches or greater, tape or paint shall be applied in continuous lines along each side of the pipe as well as along the top of the pipe. Aboveground pipe as drinking water treatment plants shall be color coded and labeled in accordance with subsection 62-555.320(10),F.A.C., and all other aboveground pipe shall be painted blue or shall be color coded or marked like underground pipe.

Utility Construction Notes (DEP)

62-555.314 Location of Public Water System Mains:
For the purpose of this section, the phrase "Water Mains" shall mean Mains, including treatment Plant process piping, conveying either raw, partially treated, or finished drinking water; Fire Hydrant leads; and service lines that are under the control of a Public Water System and that have an inside diameter of three (3") inches or greater.

(1) Horizontal Separation Between Underground Water Mains and Sanitary or Storm Sewers, Wastewater or Storm water Force Mains, Reclaimed Water Pipelines, and On-site Sewage Treatment and Disposal Systems:
(a) New or relocated, underground WATER MAINS shall be laid to provide a horizontal distance of at least (3) Three Feet between the outside of the WATER MAIN and the outside of any existing or proposed Storm Sewer, Storm water Force Main, or pipeline conveying reclaimed water regulated under Part III of Chapter 62-610, F.A.C.
(b) New or relocated, underground WATER MAINS shall be laid to provide a horizontal distance of at least (3) three feet, and preferably (10) Ten Feet, between the outside of the WATER MAIN and the outside of any existing or proposed vacuum-type Sanitary Sewer.
(c) New or relocated, underground WATER MAINS shall be laid to provide a horizontal distance of at least (6) Six Feet, and preferably (10) Ten Feet, between the outside of the WATER MAIN and the outside of any existing or proposed Gravity- or Pressure-type Sanitary Sewer, Wastewater Force Main, or pipeline conveying reclaimed water not regulated under Part III of Chapter 62-610 F.A.C. The Minimum Horizontal Separation distance between WATER MAINS and Gravity-type Sanitary Sewers shall be reduced to (3) Three Feet where the BOTTOM of the WATER MAIN is laid at least (6) Six Inches above the Top of the Sewer.
(d) New or relocated, underground WATER MAINS shall be laid to provide a horizontal distance of at least (10) Ten Feet between the outside of the WATER MAIN and all parts of any existing or proposed "On site Sewage Treatment and Disposal System" as defined in Section 381.0065(2). F.S. and Rule 64E-6.002. F.A.C.

(2) Vertical Separation Between Underground WATER MAINS and Sanitary or Storm Sewers, Wastewater or Storm water Force Mains, and Reclaimed Water Pipelines:
(a) New or relocated underground WATER MAINS crossing any existing or proposed gravity- or vacuum-type sanitary sewer or storm sewer shall be laid so the outside of the WATER MAIN is at least (6) Six inches, and preferably 12 inches above, or at least 12 Inches below the outside of the other pipeline. However, it is preferable to lay the WATER MAIN "ABOVE" the other pipeline.
(b) New or relocated, Underground WATER MAINS crossing any existing or proposed pressure-type sanitary sewer, wastewater or stormwater Force Main, or Pipeline conveying reclaimed water shall be laid so the outside of the WATER MAIN is at least (12) inches ABOVE or BELOW the Outside of the other pipeline. However, it is preferable to lay the WATER MAIN above the other pipeline.
(c) At the Utility crossings described in paragraphs (a) & (b) Above, one full length of Water Main Pipe shall be centered above or below the other pipeline so the WATER MAIN Joints will be as far as possible from the other pipeline. Alternatively, at such crossings, the pipes shall be arranged so that all WATER MAIN Joints are at least (3) Three feet from all joints in Vacuum-type Sanitary Sewers, Storm Sewers, Stormwater Force Mains, or pipelines conveying reclaimed water regulated under Part III of Chapter 62-610, F.A.C., and at least (6) Six Feet from all Joints in Gravity- or Pressure-type Sanitary Sewers, Wastewater force mains, or pipelines conveying reclaimed water not regulated under Part III of Chapter 62-610, F.A.C.

(3) Separation Between WATER MAINS and Sanitary or Storm Sewer Manholes:
(a) No WATER MAIN shall pass thru, or come into contact with any part of a Sanitary Manhole or a Storm Sewer Manhole.

(4) Separation Between Fire Hydrant Drains and Sanitary or Storm Sewers, Wastewater or Stormwater Force Mains, reclaimed Water Pipelines, and On-Site Sewage Treatment and Disposal Systems. New or relocated Fire Hydrants with underground Drains shall be located so that the drains are at least (3) Three Feet from any existing or proposed storm sewer, Stormwater force main, or pipeline conveying reclaimed water regulated under Part III of Chapter 62-610, F.A.C.; at least (3) Three Feet, and preferably (10) Ten Feet, from any existing or proposed gravity- or Pressure-type Sanitary Sewer, Wastewater force main, or pipeline conveying reclaimed water not regulated under Part III of Chapter 62-610, F.A.C.; and at least (10) Ten Feet from any existing or proposed "on-site sewage treatment and disposal system" as defined in Section 381.0065(2), F.S. and Rule 64E-6.002, F.A.C.

(5) Exceptions/Mitigation:
Adherence to the above Constraints and Separations in Items 1 through 4 shall be Complied to, "WITHOUT EXCEPTION". If for some reason where it is not technically feasible or Economically Sensible that Items 1 through 4 cannot be complied with, Contractor will Stop Work and Notify the Engineer of record for the appropriate solution, which will be submitted to "The Department of Environmental Protection" for APPROVAL, prior to work commencement.

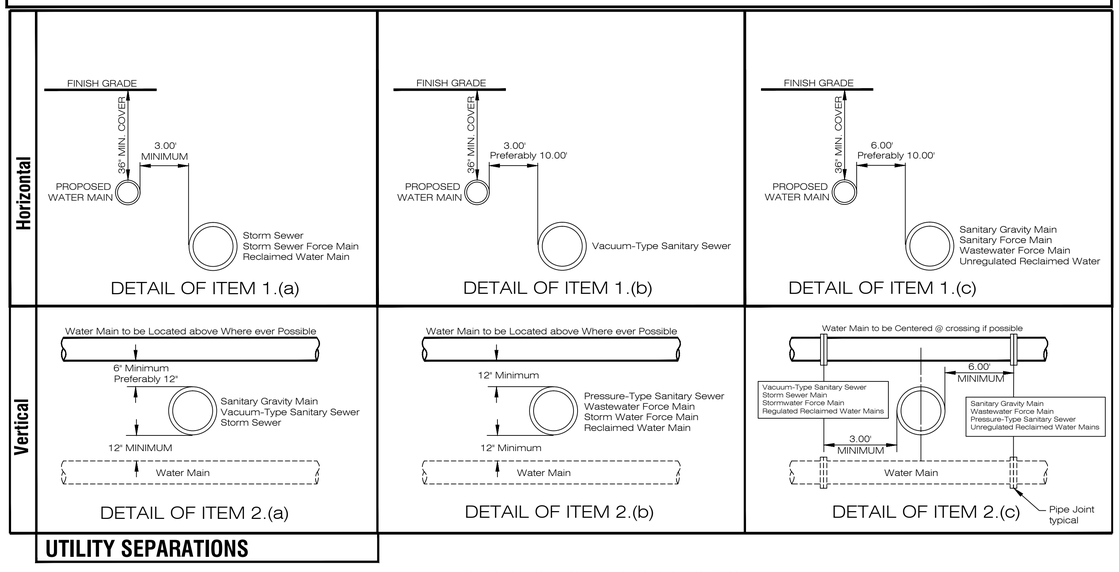

UTILITY SEPARATIONS

PIPING CLEARANCES

NOT TO SCALE

NO.	REVISIONS	DATE

DESIGN XXX
DRAWN XXX
DATE XXX

CITY OF CLERMONT
STANDARD DETAILS

CITY OF CLERMONT
685 WEST MONTROSE STREET
P.O. BOX 120219
CLERMONT, FLORIDA 34711
PHONE: (352) 241-7335

SIGNATURE AND SEAL

DRAWING FILE

DRAWING D3

SHEET OF

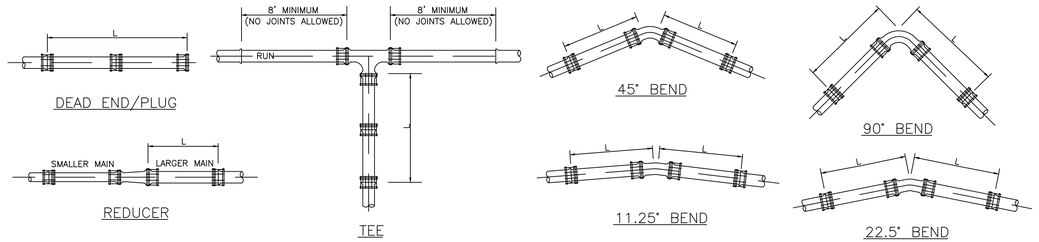

TABLE OF THRUST RESTRAINT LENGTHS															
PIPE SIZE (INCHES)	90° BEND		45° BEND		22.5° BEND		11.25° BEND		TEES		DEAD END & PLUG		REDUCER		
	P.V.C. (L)	DUCTILE IRON (L)	P.V.C. (L)	DUCTILE IRON (L)	P.V.C. (L)	DUCTILE IRON (L)	P.V.C. (L)	P.V.C. (L)	DUCTILE IRON (L)	DUCTILE IRON (L)	P.V.C. (L)	DUCTILE IRON (L)	PIPE SIZES	P.V.C. (L)	DUCTILE IRON (L)
4	20'	16'	8'	7'	4'	3'	2'	2'	15'	10'	45'	28'	6"x4"	32'	21'
6	28'	22'	12'	9'	6'	4'	3'	2'	33'	21'	63'	40'	8"x6"	34'	22'
8	36'	29'	15'	12'	7'	6'	4'	3'	52'	33'	82'	52'	10"x8"	33'	21'
10	43'	34'	18'	14'	9'	7'	4'	3'	68'	43'	98'	62'	12"x10"	34'	21'
12	50'	40'	21'	17'	10'	8'	5'	4'	85'	53'	116	73'	14"x12"	63'	40'
14	57'	46'	24'	20'	12'	9'	6'	5'	102'	63'	132	84'	16"x14"	63'	40'
16	63'	51'	26'	21'	13'	10'	6'	5'	116'	73'	148	93'			

THRUST RESTRAINT DESIGN NOTES

1. RESTRAINT JOINTS, FITTINGS AND VALVE REQUIREMENTS CALCULATED BY THE THRUST RESTRAINT DESIGN PROGRAM PROVIDED BY EBAA IRON SALES, INC.
2. DATA BASED ON MAXIMUM WATER PRESSURE OF 150 PSI, THE UNIFIED SOILS CLASSIFICATION SYSTEM (SOIL TYPE SP), THE PIPE BEDDED IN NATIVE SOIL WITH A MINIMUM 2.5' COMPACTED FILL OVER THE PIPE, AND USING A SAFETY FACTOR OF 1.5 FOR THE DATA.
3. ALL FITTINGS AND VALVES TO BE RESTRAINED WITH "MEGA-LUG" RESTRAINTS, AND ALL BELL AND SPIGOT JOINTS TO BE RESTRAINED WITH A RESTRAINING HARNESS WITHIN THE REQUIRED LENGTH OF RESTRAINED PIPE (L).

THRUST RESTRAINT DETAILS

NOT TO SCALE

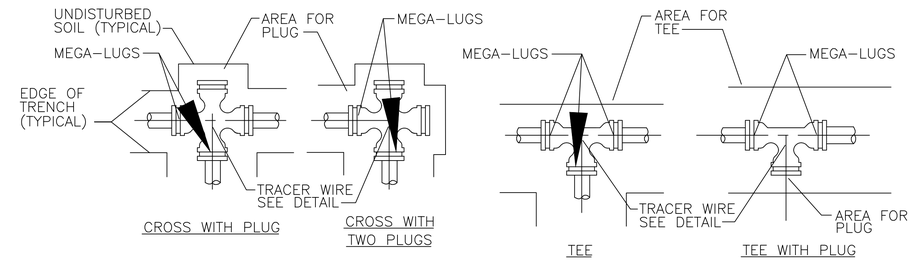

NOTES:
USE "MEGA-LUG" FITTINGS AS APPROVED BY THE PROJECT ENGINEER. "MEGA-LUG" CALCULATIONS TO BE PROVIDED BY THE CONTRACTOR AND APPROVED BY THE CITY ENGINEER PRIOR TO CONSTRUCTION.

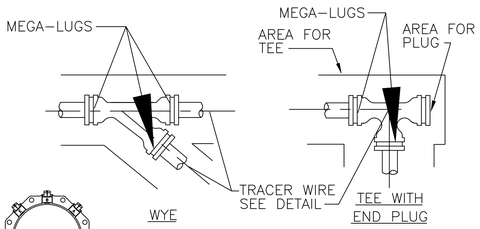

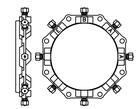

EBAA IRON
MEGA-LUG Series 2000
PRESSURE RATINGS FOR ORDINARY WATER WORKS:

DR14 200 PSI	SDR17 250 PSI
DR18 150 PSI	SDR21 200 PSI
DR25 100 PSI	SDR26 160 PSI

UL ◁FM▷ RATED 150 PSI ON DR18
EXCEEDS UNI-B-13 OF 92
FOR USE ON PVC PIPE
MADE IN THE USA

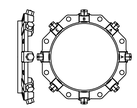

EBAA IRON
MEGA-LUG Series 1100
350 PSI RATING
UL
◁FM▷ RATED 175 PSI
FOR USE ON DUCTILE IRON PIPE
MADE IN THE USA

MEGALUG DETAILS

NOT TO SCALE

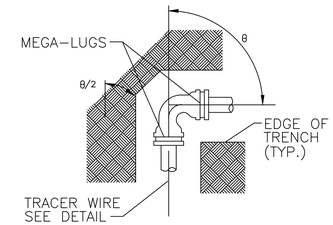

BENDS

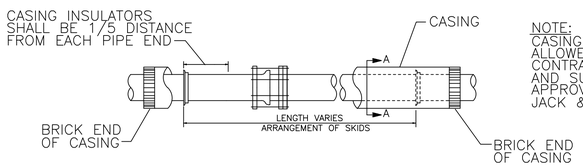

NOTE:
CASING JOINTS WILL NOT BE ALLOWED UNDER TRAFFIC LANES. CONTRACTOR TO SPACE JOINTS AND SUBMIT SHOP DRAWING FOR APPROVAL BY ENGINEER BEFORE JACK & BORE BEGINS.

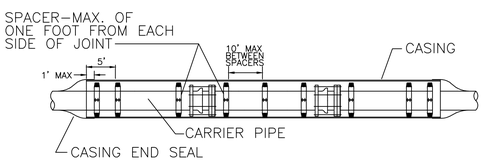

TYPICAL CASING SPACER PLACEMENT

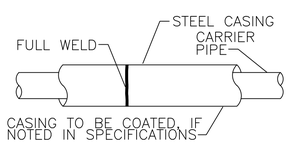

TYPICAL CASING JOINT

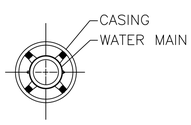

SECTION A-A

NOTE: USE FUSION COATED STEEL CASING INSULATORS 12" WIDE WITH 2" GLASS REINFORCED RUNNERS FOR PIPE SKIDS.

JACK AND BORE STEEL CASING MINIMUM THICKNESS IN INCHES	
NOMINAL OUTSIDE DIAMETER	MINIMUM WALL THICKNESS
3/4"	0.113"
1"	0.133"
1-1/4"	0.140"
1-1/2"	0.145"
2"	0.154"
4"	0.188"
6"	0.188"
8"	0.188"
10"	0.188"
12"	0.188"
24"	0.250"
30"	0.312"
36"	0.375"
42" & GREATER	0.500"

MINIMUM THICKNESS FOR PIPE DIAMETERS NOT SHOWN SHALL BE THE SAME AS REQUIRED FOR THE FOR THE NEXT LARGER SIZE LISTED ABOVE.
ALL STEEL CASINGS ARE TO MEET OR EXCEED FDOT REQUIREMENTS AS SET FORTH IN THE UTILITY ACCOMMODATION MANUAL.

PAVEMENT CROSSING WITH CASING BORE, TUNNEL OR OPEN CUT

NOT TO SCALE

NO.	REVISIONS	DATE

DESIGN XXX
DRAWN XXX
DATE XXX

CITY OF CLERMONT
STANDARD DETAILS

CITY OF CLERMONT
685 WEST MONTROSE STREET
P.O. BOX 120219
CLERMONT, FLORIDA 34711
PHONE: (352) 241-7335

SIGNATURE AND SEAL

DRAWING FILE

DRAWING
D4

SHEET OF

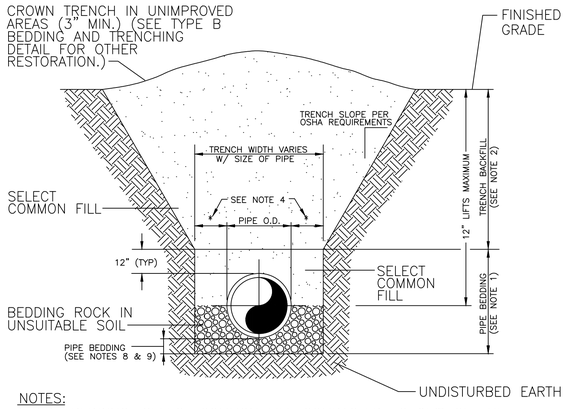

NOTES:
1. PIPE BEDDING: SELECT COMMON FILL COMPACTED TO 95% OF THE MAXIMUM DENSITY AS PER AASHTO T-180.
2. TRENCH BACKFILL: COMMON FILL COMPACTED TO 95% OF THE MAXIMUM DENSITY AS PER AASHTO T-180.
3. USE TYPE A BEDDING TO BE DETERMINED IN THE FIELD AS DIRECTED BY THE CITY OF CLERMONT.
4. (*): 15" MAX. FOR PIPE DIAMETER LESS THAN 24", AND 24" MAX. FOR PIPE DIAMETER 24" AND LARGER.
5. WATER SHALL NOT BE PERMITTED IN THE TRENCH DURING CONSTRUCTION.
6. ALL PIPE TO BE INSTALLED WITH BELL FACING UPSTREAM TO THE DIRECTION OF THE FLOW.
7. SHEETING AND BRACING SHALL BE USED IN ACCORDANCE WITH CURRENT TRENCHING REGULATIONS AND WHERE UNSAFE CONDITIONS EXIST.
8. GRAVITY SEWERS SHALL UTILIZE TYPE A BEDDING, IF REQUIRED BY THE ENGINEER. BEDDING DEPTH SHALL BE 4" MINIMUM FOR PIPE DIAMETER LESS THAN 15", AND 6" MINIMUM FOR PIPE DIAMETER 16" AND LARGER.
9. DEPTH FOR REMOVAL OF UNSUITABLE MATERIAL SHALL GOVERN DEPTH OF BEDDING ROCK BELOW THE PIPE. CITY OF CLERMONT SHALL DETERMINE IN THE FIELD REQUIRED REMOVAL OF UNSUITABLE MATERIAL TO REACH SUITABLE FOUNDATION.

TYPE A BEDDING AND TRENCHING DETAIL
NOT TO SCALE

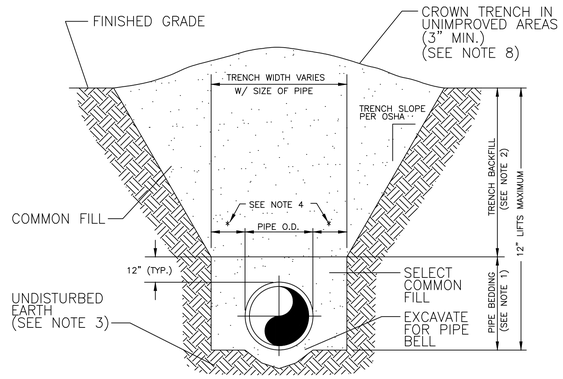

NOTES:
1. PIPE BEDDING: SELECT COMMON FILL COMPACTED TO 95% OF THE MAXIMUM DENSITY AS PER AASHTO T-180.
2. TRENCH BACKFILL: COMMON FILL COMPACTED TO 95% OF THE MAXIMUM DENSITY AS PER AASHTO T-180.
3. PIPE BEDDING UTILIZING SELECT COMMON FILL OR BEDDING ROCK IN ACCORDANCE WITH TYPE A BEDDING AND TRENCHING DETAIL MAY BE REQUIRED AS DIRECTED BY THE ENGINEER.
4. (*): 15" MAX. FOR PIPE DIAMETER LESS THAN 24", AND 24" MAX. FOR PIPE DIAMETER 24" AND LARGER.
5. WATER SHALL NOT BE PERMITTED IN THE TRENCH DURING CONSTRUCTION.
6. ALL PIPE TO BE INSTALLED WITH BELL FACING UPSTREAM TO THE DIRECTION OF THE FLOW.
7. SHEETING AND BRACING SHALL BE USED IN ACCORDANCE WITH CURRENT TRENCHING REGULATIONS AND WHERE UNSAFE CONDITIONS EXIST.
8. FINAL RESTORATION IN IMPROVED AREAS SHALL BE IN COMPLIANCE WITH ALL APPLICABLE REGULATIONS OF GOVERNING AGENCIES. SURFACE RESTORATION WITHIN CITY OF CLERMONT RIGHT-OF-WAY SHALL COMPLY WITH REQUIREMENTS OF RIGHT-OF-WAY UTILIZATION REGULATIONS AND ROAD CONSTRUCTION SPECIFICATIONS.

TYPE B BEDDING AND TRENCHING DETAIL
NOT TO SCALE

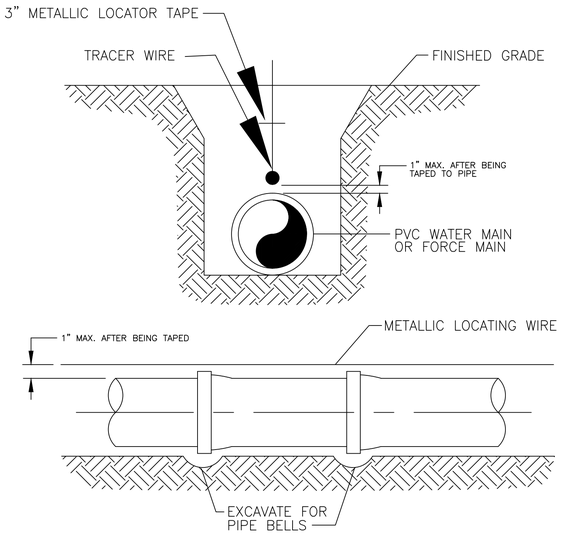

NOTES:
1. PVC PIPE SHALL REQUIRE INSULATED METALLIC LOCATING WIRE (14 GAUGE COPPER) CAPABLE OF DETECTION BY A CABLE LOCATOR.
2. AND SHALL BE BURIED DIRECTLY ABOVE THE CENTERLINE OF THE PIPE. LOCATING WIRE SHALL TERMINATE AT THE TOP OF EACH VALVE BOX.
3. AND BE CAPABLE OF EXTENDING 12" ABOVE TOP OF BOX IN SUCH A MANNER SO AS NOT TO INTERFERE WITH VALVE OPERATION. USE DUCT TAPE AS NECESSARY TO HOLD WIRE DIRECTLY ON THE TOP OF THE PIPE.

PVC PIPE LOCATING WIRE DETAIL
NOT TO SCALE

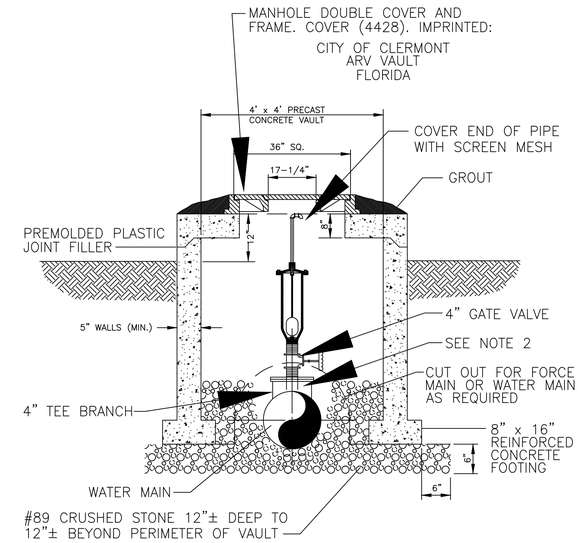

NOTES:
1. ABOVE DETAIL IS BASED ON 4" COMBINATION AIR/VACUUM RELEASE VALVE. CHANGE PIPE AND FITTINGS ACCORDINGLY FOR OTHER VALVE SIZES AND TYPES. VALVE SIZES TO BE DETERMINED BY THE ENGINEER AND APPROVED BY THE CITY PRIOR TO INSTALLATION.
2. THE MINIMUM DIMENSION FROM TOP OF PIPE TO FINISHED GRADE SHALL BE 4.0 FEET.

AIR OR COMBINATION AIR/VACUUM RELEASE VALVE DETAIL
NOT TO SCALE

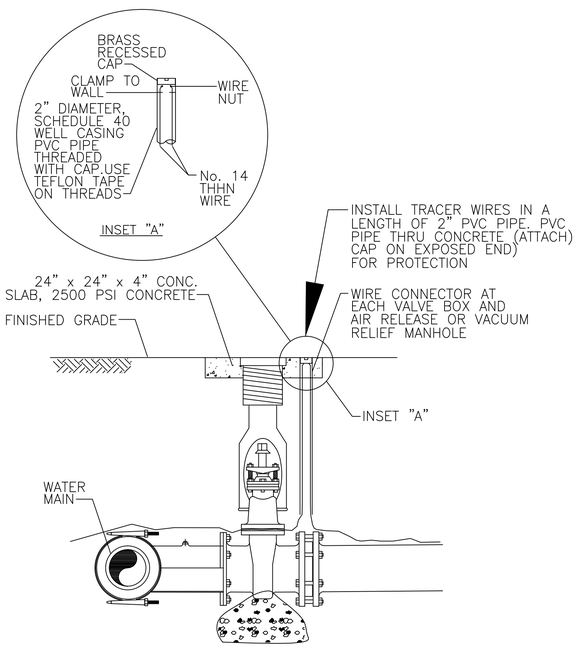

TAPPING SLEEVE DETAIL ELEVATION VIEW
NOT TO SCALE

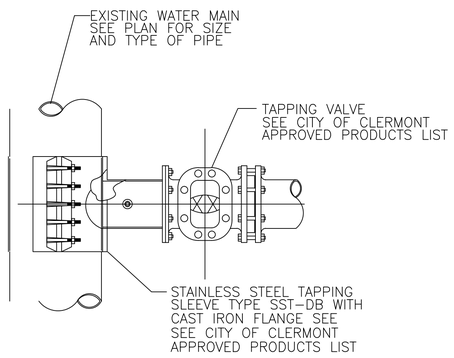

TAPPING SLEEVE DETAIL PLAN VIEW
NOT TO SCALE

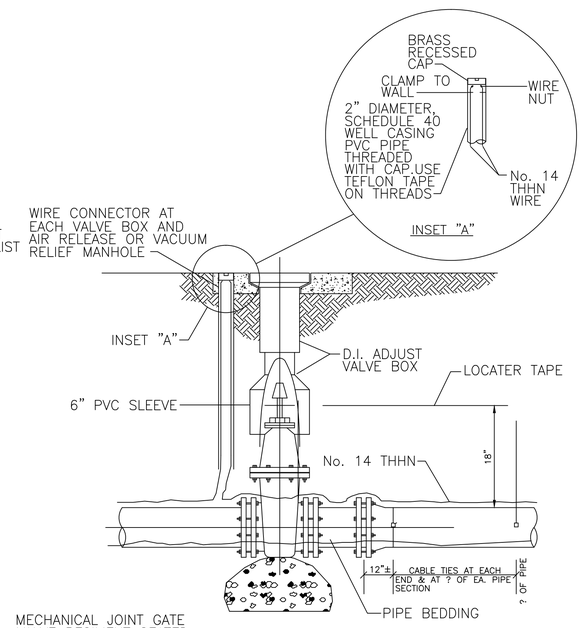

NOTE: MARK CURB "V" WHERE VALVES ARE LOCATED

PIPE DETECTOR WIRE MARKER TAPE INSTALLATION
NOT TO SCALE

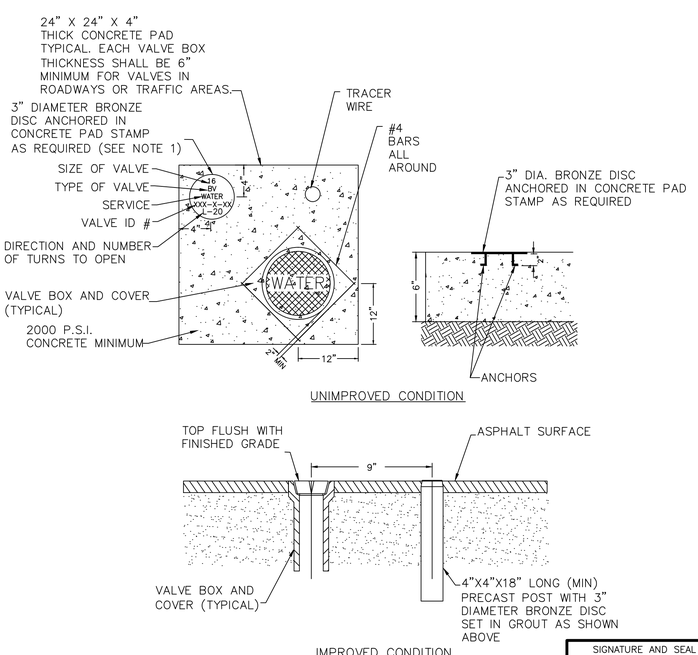

NOTES:
1. BRONZE IDENTIFICATION DISC SHALL BE REQUIRED FOR ALL VALVES
2. REUSE VALVES TO HAVE SQUARE VALVE BOX TOP

VALVE COLLAR
NOT TO SCALE

NO.	REVISIONS	DATE

DESIGN XXX
DRAWN XXX
DATE XXX

CITY OF CLERMONT STANDARD DETAILS

CITY OF CLERMONT
685 WEST MONTROSE STREET
P.O. BOX 120219
CLERMONT, FLORIDA 34711
PHONE: (352) 241-7335

SIGNATURE AND SEAL

DRAWING FILE

DRAWING D5

SHEET OF

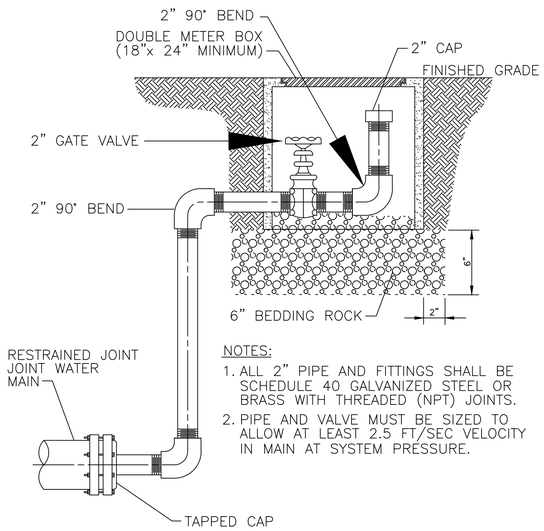

NOTES:

1. ALL 2" PIPE AND FITTINGS SHALL BE SCHEDULE 40 GALVANIZED STEEL OR BRASS WITH THREADED (NPT) JOINTS.
2. PIPE AND VALVE MUST BE SIZED TO ALLOW AT LEAST 2.5 FT/SEC VELOCITY IN MAIN AT SYSTEM PRESSURE.

BLOWOFF VALVE DETAIL

NOT TO SCALE

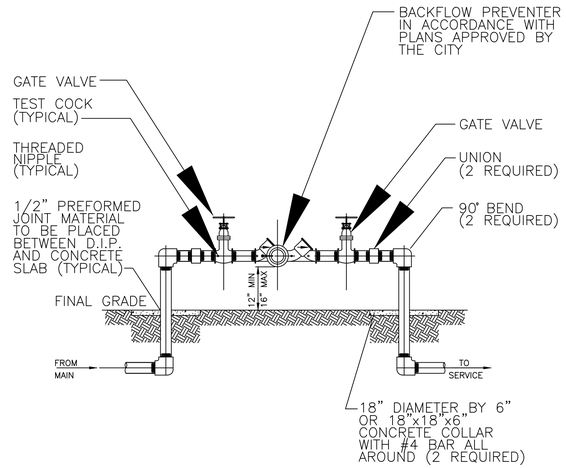

REDUCED PRESSURE BACKFLOW PREVENTER

NOT TO SCALE

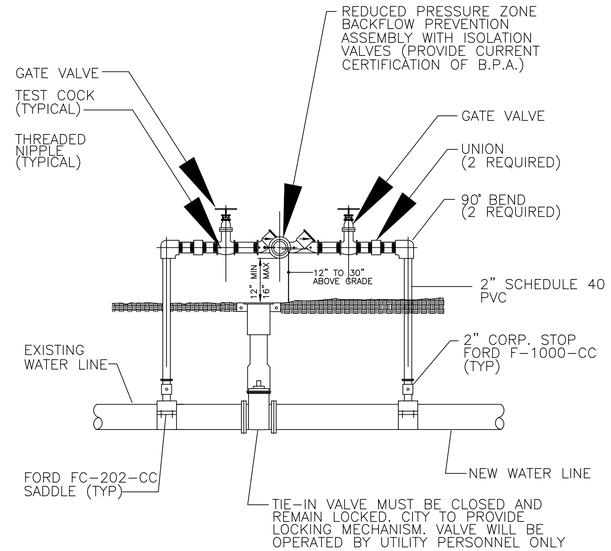

NOTE: LOCATION TO BE DETERMINED AT TIME OF PRECONSTRUCTION CONFERENCE WITH THE CITY.

TEMPORARY JUMPER CONNECTION DETAIL

NOT TO SCALE

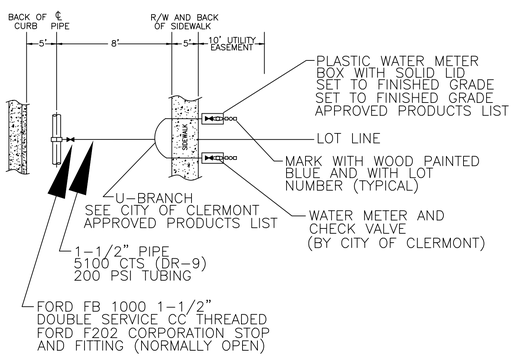

DOUBLE SERVICE

NOTES:

1. ALL WATER SERVICES AND METER BOXES SHALL BE LOCATED INSIDE THE 10' UTILITIY EASEMENT. SERVICE LINES SHALL BE CONTINUOUS FROM CORPORATION STOP TO CURB STOP.
2. ALL CLERMONT SERVICE LINES SHALL BE 1" (1-1/2" DBL. SERV.) CTS (DR-9), 200 PSI TUBING.
3. EACH SERVICE SHALL TERMINATE AT A CURB STOP WHICH SHALL BE CLEARLY MARKED WITH A 2" X 2" X 18" STAKE
4. SEE CITY OF CLERMONT APPROVED PRODUCT LIST.
5. ALL WATER SERVICES CROSSING UNDER ROADWAYS TO BE ENCASED IN LARGER SIZE SCHEDULE 40 PVC.
6. EXISTING METER BOXES TO REMAIN, PROVIDE NEW METER BOX FOR NEW SERVICES.
7. MARK CURB "W" WHERE SERVICES ARE LOCATED.
8. PROVIDE TRACER WIRE ALONG SERVICE LINES.
9. SERVICE SADDLES 1" SHALL BE CC THREAD, 1.5" – 2" FIP THREAD.
10. NO LOOPING OR EXCESSIVE BENDING OF POLY TUBING. IF SERVICE NEEDS TO BE SHORTENED, CRIMP THE POLY TUBING AND INSTALL A SS FULL CIRCLE CLAMP AROUND CRIMPED AREA WHEN COMPLETED.

WATER SERVICE CONNECTION DETAILS

NOT TO SCALE

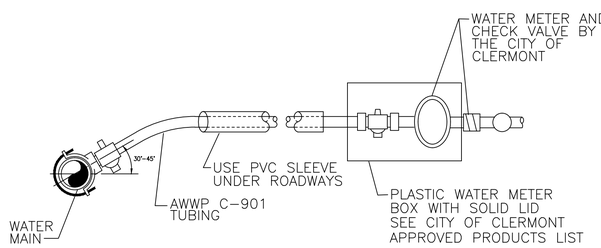

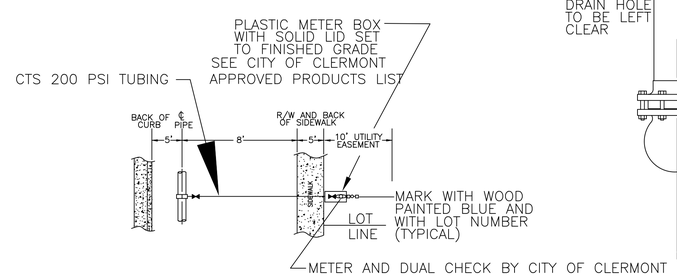

SINGLE SERVICE

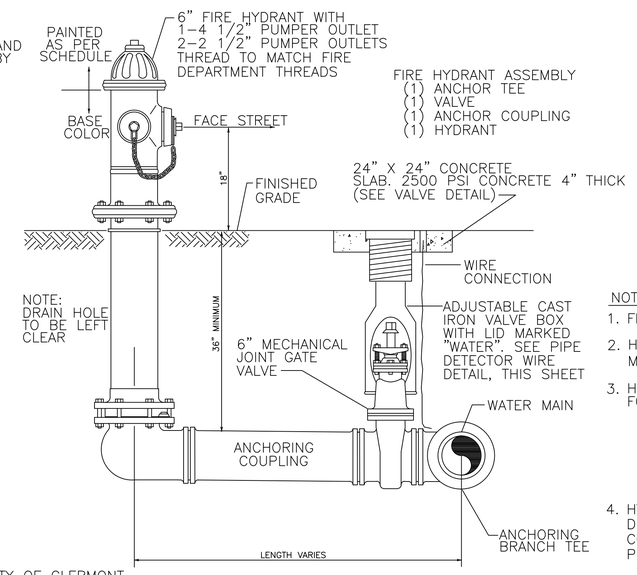

NOTES:

1. FIRE HYDRANTS SHALL BE MUELLER A-423.
2. HYDRANT MUST BE PAINTED AT FACTORY BY THE MANUFACTURER.
3. HYDRANT SHALL BE PAINTED IN ACCORDANCE WITH THE FOLLOWING COLORING DESIGNATION BASED ON THE TESTED FLOWS:
   BASE HYDRANT – CITY OWNED AND MAINTAINED YELLOW BASE/BLUE BONNET
   PRIVATELY OWNED RED
   LESS THAN 500 GPM – RED
   500 TO 999 GPM – ORANGE
   1000 TO 1499 – GREEN
   1500 GPM OR GREATER – BLUE
4. HYDRANTS TO BE FLOW TESTED BY CITY UTILITY DEPARTMENT OR COUNTY REPRESENTATIVE. COORDINATE WITH CITY INSPECTOR FOR TESTING PURPOSES.
5. BLUE PAVEMENT MARKERS (BPMs) ARE TO BE INSTALLED IN THE CENTER OF THE DRIVING LANE NEAREST THE HYDRANT.

FIRE HYDRANT DETAIL (REVISED 12/22/11)

NOT TO SCALE

NO.	REVISIONS	DATE

DESIGN XXX
DRAWN XXX
DATE XXX

CITY OF CLERMONT STANDARD DETAILS

CITY OF CLERMONT
685 WEST MONTROSE STREET
P.O. BOX 120219
CLERMONT, FLORIDA 34711
PHONE: (352) 241-7335

SIGNATURE AND SEAL

DRAWING FILE

DRAWING D6

SHEET OF

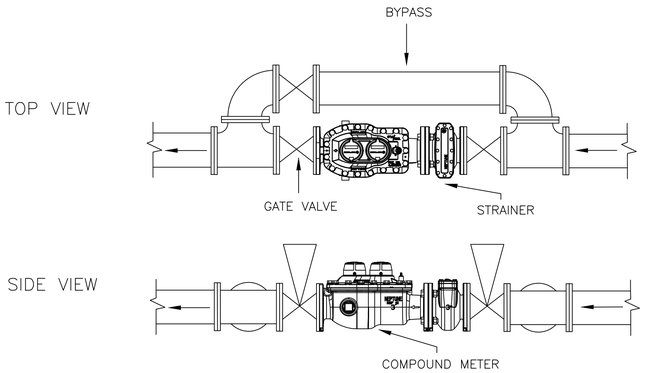

WATER SERVICES 2.5" AND LARGER – BYPASS AND METER

NOT TO SCALE

1. THE CONTRACTOR IS RESPONSIBLE FOR PROVIDING AND INSTALLING A NEPTUNE R450 METER WITH E-CODER REGISTER, 12795-220S1227 NEPTUNE R450 WALL MIU (CLERMONT SPECIAL) AND 12596-002 NEPTUNE WALL MIU ADAPTOR F/PIT STYLE REGISTER.
2. THE ASSEMBLY SHALL BE ABOVE GROUND STYLE WITH BYPASS SET UP FOR METER TESTING.
3. A STRAINER SHALL BE INSTALLED PRIOR TO THE METER AND SHALL BE FROM THE SAME MANUFACTURER AS THE WATER METER.
4. INCLUDE SPOOL PIECES 5X THE DIAMETER UPSTREAM AND 10X THE DIAMETER DOWNSTREAM MINIMUM LENGTH.
5. ISOLATION VALVES SHALL BE INSTALLED PRIOR TO THE METER AND ANOTHER ONE PAST THE METER TEST PORT AND BEFORE THE DOWNSTREAM BYPASS CONNECTION.
6. BYPASS PIPING SHALL HAVE A LOCKABLE ISOLATION VALVE UNLESS IT IS UNDERGROUND.

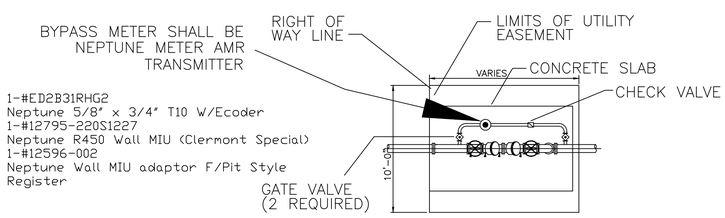

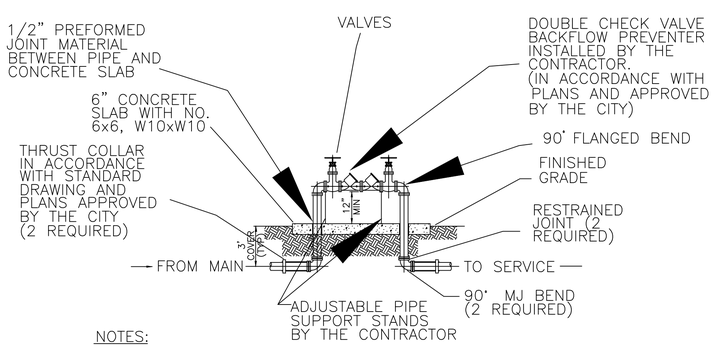

NOTES:

1. THE CONTRACTOR SHALL CONTACT THE UTILITIES INSPECTOR FOR EXACT ASSEMBLY LENGTH AND HEIGHT ABOVE THE SLAB. ALL PIPE FITTINGS AND APPURTENANCES SHALL BE INSTALLED BY THE CONTRACTOR.
2. ALL ABOVE GROUND PIPE SHALL BE FLANGED DUCTILE IRON.

FIRE ASSEMBLY

NOT TO SCALE

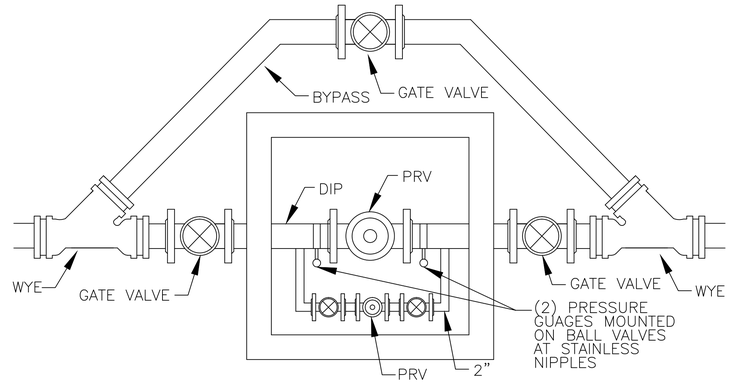

PLAN VIEW

NOT TO SCALE

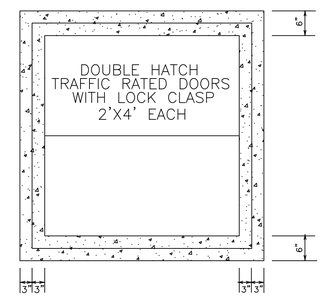

HATCH

NOT TO SCALE

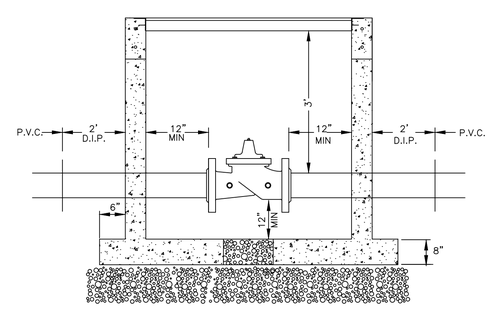

SECTION

NOT TO SCALE

BY-PASS PRV VAULT

NOT TO SCALE

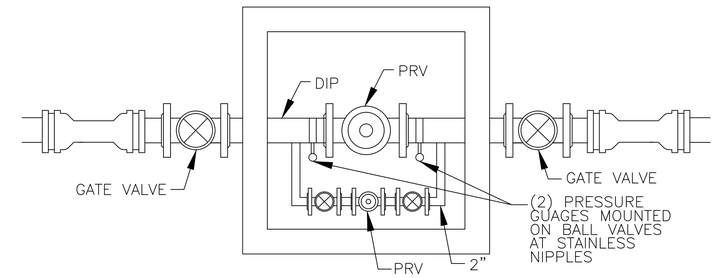

PLAN VIEW

NOT TO SCALE

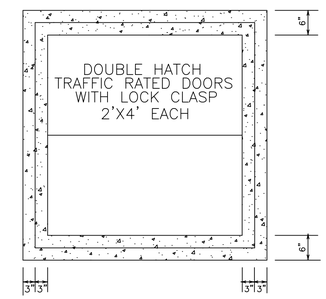

HATCH

NOT TO SCALE

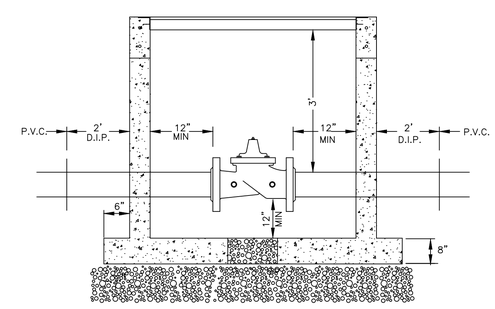

SECTION

NOT TO SCALE

NON BY-PASS PRV VAULT

NOT TO SCALE

NO.	REVISIONS	DATE

DESIGN XXX
DRAWN XXX
DATE XXX

CITY OF CLERMONT STANDARD DETAILS

CITY OF CLERMONT
685 WEST MONTROSE STREET
P.O. BOX 120219
CLERMONT, FLORIDA 34711
PHONE: (352) 241-7335

SIGNATURE AND SEAL

DRAWING FILE

DRAWING D7

SHEET OF

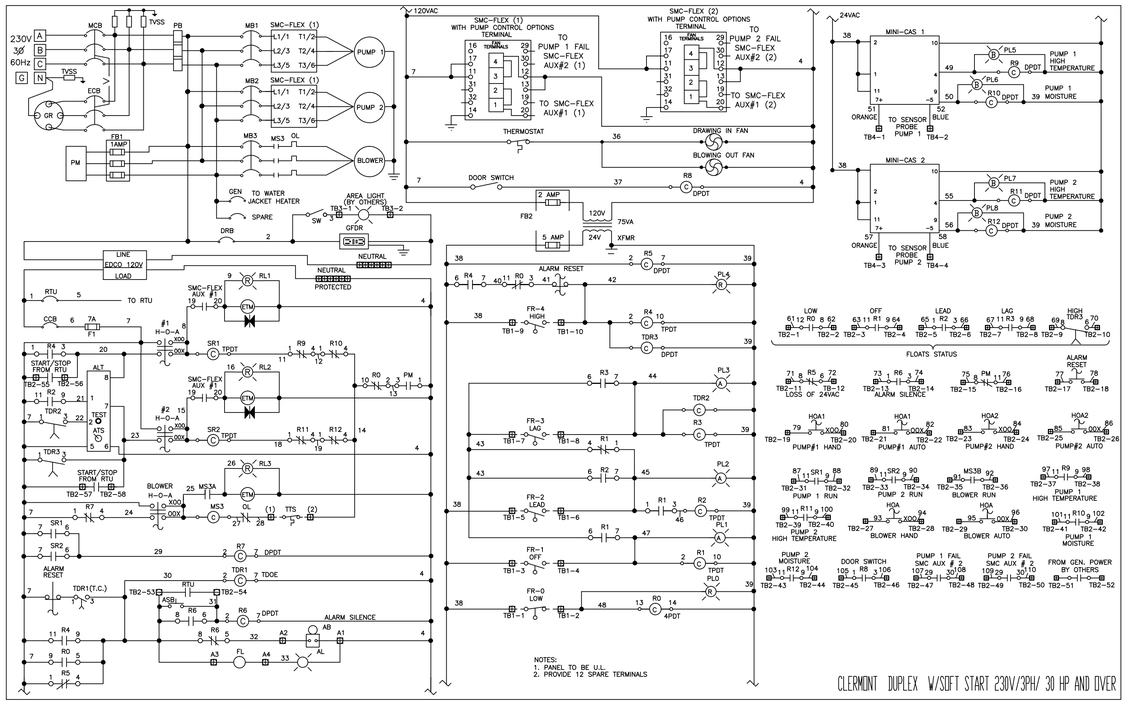

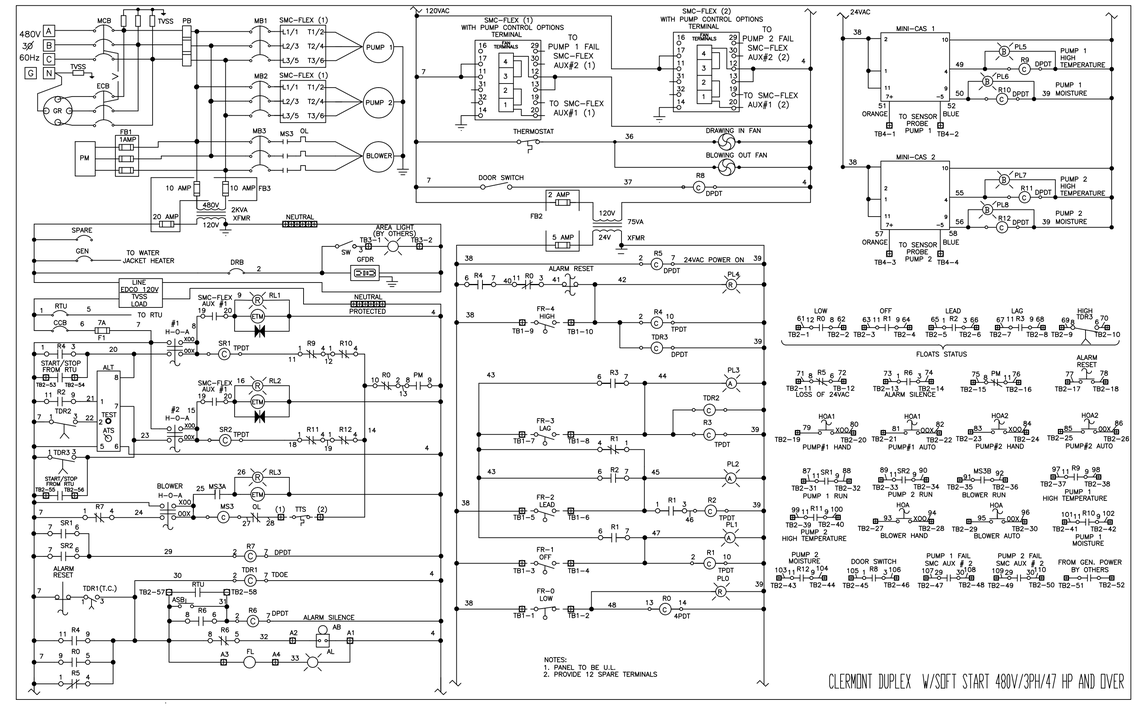

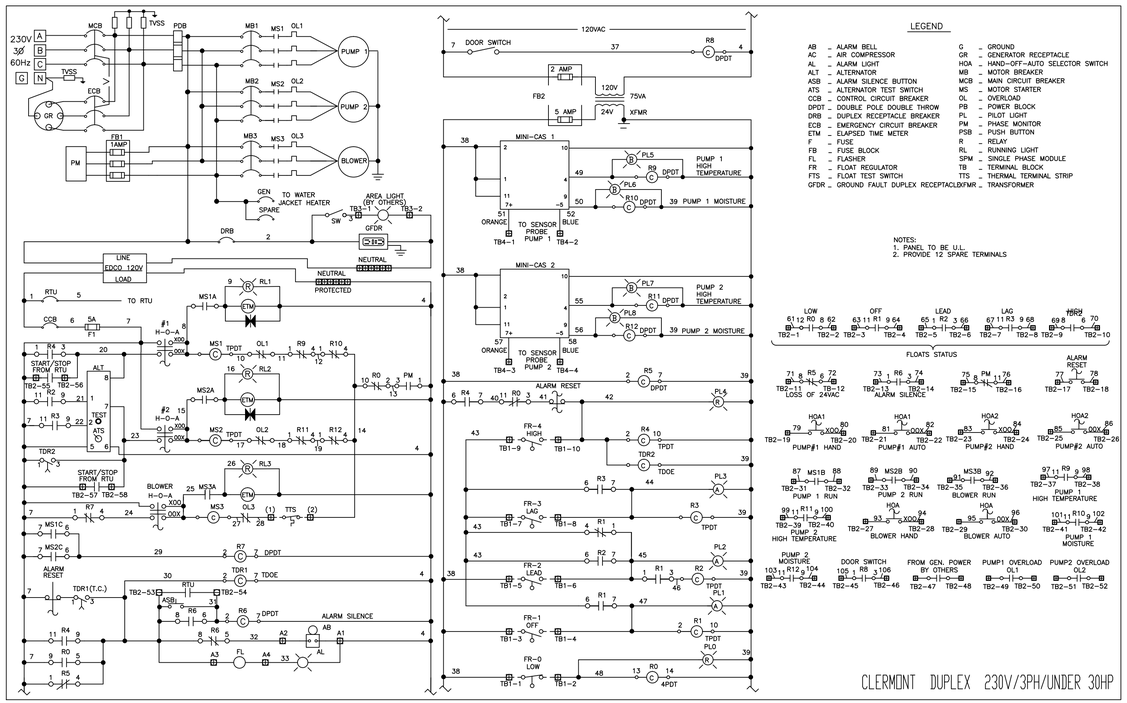

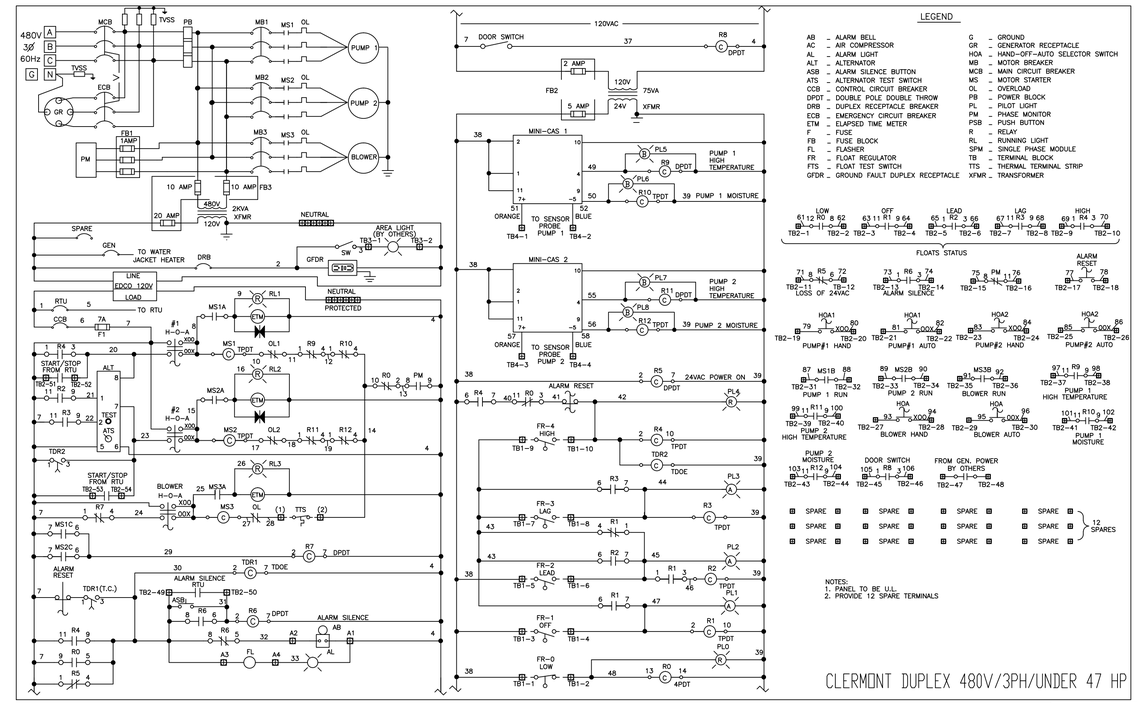

ELECTRICAL SCHEMATIC

NOT TO SCALE

REVISIONS	NO.	DATE

DESIGN XXX
DRAWN XXX
DATE XXX

CITY OF CLERMONT
STANDARD DETAILS

CITY OF CLERMONT
655 WEST MONTROSE STREET
P.O. BOX 120219
CLERMONT, FLORIDA 34711
PHONE: (352) 241-7335

SIGNATURE AND SEAL

DRAWING FILE

DRAWING D8

SHEET OF

ELECTRICAL NOTES

1. ALL WORK TO BE DONE IN ACCORDANCE WITH ALL CURRENT NATIONAL AND LOCAL CODES AND ORDINANCES.
2. NOTIFY ENGINEER OF ANY DISCREPANCIES BETWEEN THESE DRAWINGS AND THE ACTUAL FIELD CONDITIONS. OBTAIN CLARIFICATIONS FROM THE ENGINEER OR OWNERS PRIOR TO COMMENCING WORK.
3. CONTRACTOR WILL VISIT SITE PRIOR TO BIDDING, NO ALLOWANCES FOR ANY EXTRA EXPENSES WILL BE GRANTED AS A RESULT OF NOT VISITING THE SITE.
4. ALL WIRE TO BE THHN/THWN COPPER, MINIMUM SIZE 12 AWG.
5. RACEWAYS: RIGID STEEL CONDUIT FULL WEIGHT PIPE GALVANIZED, THREADED, AND MINIMUM 3/4" UNLESS OTHERWISE NOTED. PVC CONDUIT: HEAVY DUTY TYPE, SIZE AS INDICATED. SEPARATE RACEWAYS SHALL BE USED FOR EACH VOLTAGE SYSTEM. USE RIGID GALVANIZED STEEL FOR ABOVE GRADE EXPOSED LOCATIONS, PVC FOR BELOW GRADE LOCATIONS, AND PVC-COATED RIGID STEEL FOR CLASS 1, DIVISION 1 LOCATIONS (FROM WET WELL TO CONDUIT SEAL-OFFS.
6. ANY INSTALLATION CONFLICT WITH OTHER TRADES SHALL BE BROUGHT TO THE ATTENTION OF THE ENGINEER FOR CLARIFICATION BEFORE PROCEEDING.
7. CONTRACTOR WILL VERIFY EXISTING CONDUITS AND EXTEND AS REQUIRED FOR INSTALLATION OF GENERATOR, ATS AND ALL OTHER ASSOCIATED CONTROL PANELS AND EQUIPMENT.
8. CONTRACTOR WILL INSTALL GENERATOR AND ALL ASSOCIATED EQUIPMENT IN ACCORDANCE WITH MANUFACTURERS SPECIFICATIONS.
9. CONTRACTOR WILL VERIFY PROPER PLACEMENT OF CONDUITS TO GENERATOR PAD AND PANELS.
10. ALL ELECTRICAL EQUIPMENT TO BE NEMA 3R RATED.
11. __ AMP MAIN CIRCUIT BREAKER IN NEMA 3R ENCLOSURE.
12. POWER DISTRIBUTION BLOCK INSIDE CONTROL PANEL.
13. POWER AND CONTROL TERMINAL STRIP IN CONTROL PANEL.
14. POWER AND CONTROL TERMINAL STRIP IN TERMINAL CABINET.
15. EXPLOSION PROOF SEAL OFF FITTINGS FOR PUMP AND FLOAT CABLES. EACH CABLE SHALL BE COMPLETELY SEALED BOTH INSIDE (AROUND INDIVIDUAL CONDUCTORS) AND OUTSIDE OF ITS OUTER JACKET TO PREVENT EXPLOSIVE VAPOR INTRUSION INTO CONTROL PANEL. WET WELL AND CONDUITS LEAVING IT ARE CLASS 1, DIVISION 1 LOCATIONS UP TO THE SEAL-OFFS.
16. EXPLOSION PROOF SEAL OFF BETWEEN TERMINAL CABINET AND CONTROL TO BE CROUSE-HINDS EYSR OE APPROVED EQUAL.
17. SURGE SUPPRESSOR, LEA INT. MODEL GB100 WITH FUSED DISCONNECTS OR EQUAL.
18. ADDITIONAL SURGE SUPPRESSION REQUIRED IN CONTROL PANEL SHALL BE DEHN TYPE I AND II.
19. __ KW GENERATOR, EMERGENCY SERVICE, 2 PUMP OPERATION. CUMMINS ONAN OR CATERPILLAR: FUEL TANK: 24 HOUR AUTOMATIC TRANSFER SWITCH:
20. __ AMP NORMAL SERVICE, 480 VOLT.
21. CONTRACTOR WILL PROVIDE TELEMETRY AND INSTALL TELEMETRY SYSTEM AS REQUIRED BY THE CITY OF CLERMONT.
22. INSTALLATION OF THE SCADA SYSTEM TO BE DONE BY SANTIS ENGINEERING INC., 7011 N ATLANTIC AVE, CAPE CANAVERAL, FL 32920, 321-868-6340 OR SEI@SANTISENGINEERING.COM OR APPROVED EQUAL.
23. TELEMETRY PANEL SHALL BE ALUMINUM CABINET WITH EXTERNAL EPOXY COAT.

STRUCTURAL NOTES

1. 4x4x10 STEEL REINFORCED CONCRETE POST OR 4" ALUMINUM POST WITH PVC CAPS.
2. 12 GUAGE CORROSION RESISTANT STRUCTURAL CHANNEL.
3. 1/2" 316 STAINLESS STEEL BOLTS, NUTS AND WASHERS.

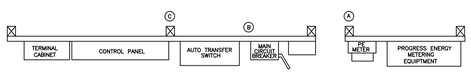

PLAN VIEW

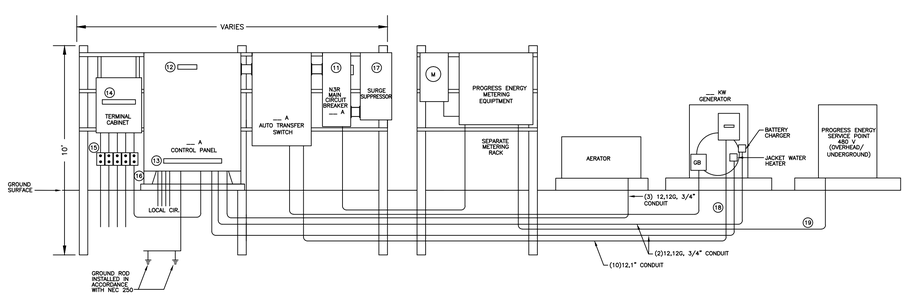

ELEVATION

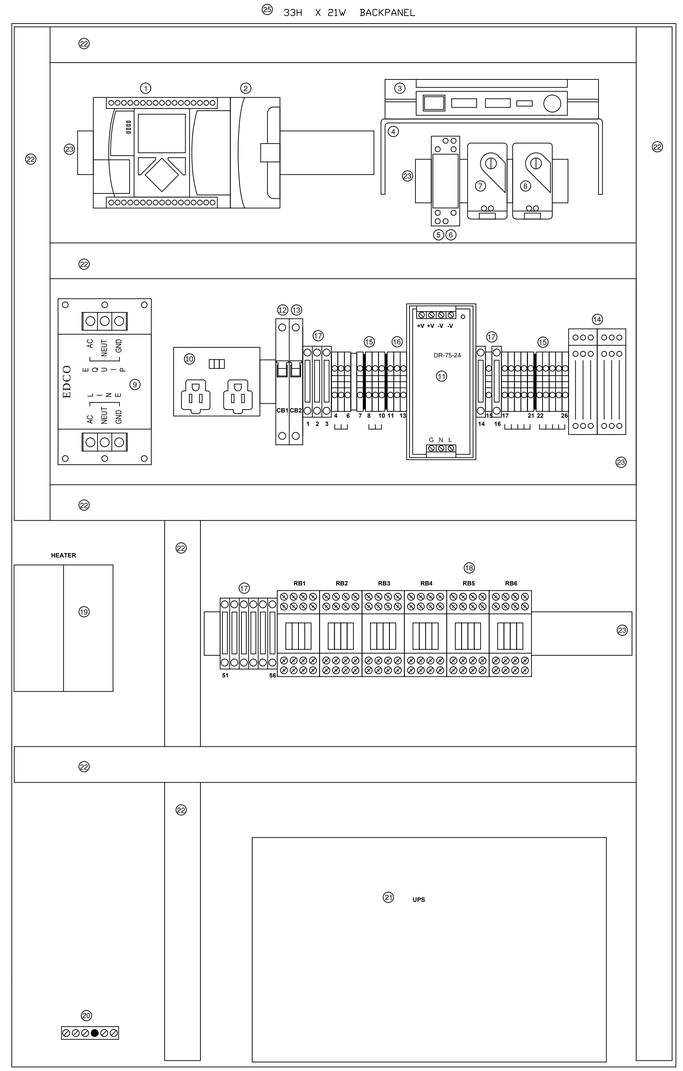

ASSEMBLY

	Item	Manufacturer	Part no.	Qty
1	MicroLogix 1100	ALLEN BRADLEY	1763-L16BWA	1
2	DI Module	ALLEN BRADLEY	1762-IQ16	1
3	Radio	MDS	entraNET 900	1
4	Radio Bracket	Sunshine	SEI-CRB1	1
5	RELAY (120VAC)	AUTOMATION DIRECT	QM2N1-A120	1
6	RELAY BASE	AUTOMATION DIRECT	SQM08D	1
7	Thermostat (N.O.)	SAGINAW	SCE-TEMNO	1
8	Thermostat (N.C.)	SAGINAW	SCE-TEMNC	1
9	120V Surge Suppressor	EDCO	HSP121BT-1RU	1
10	Duplex Receptacle	Wago	51195982	1
11	Power Supply 24VDC/3.2A	MEAN WELL	DR-75-24	1
12	10A Branch Ciruit breaker	ASI	QL113DDMKM10	1
13	10A Supplementary Breaker	ASI	QZ113D210	1
14	24V Surge Suppressor	EDCO	DRS-036	1
15	2 cond. feed thru term.	WAGO	2001-1201	19
16	2 cond. Gnd block	WAGO	2001-1207	3
17	Fuse terminal	WAGO	281-611	11
18	Isolation Relay Block	Automation Direct	RS4N-DE	6
19	Heater	SAGINAW	SCE-AHC15	1
20	Ground Bar	Square D	ADR2	1
21	UPS	APC	BE550R	1
22	Wire Duct (1"W x 2"H)	Automation Direct	T1-1020G-1	137'
23	Din rail	Automation Direct	DN-R35S1	39"
24	Enclosure, AL, 4x, 36x24	Rittal	E36H2408AL	1
25	Backplate (white)	Rittal	E36P24	1
26	3 Point Latch	Rittal	WMLHPLS6	1
27	Cooling Fan	Saginaw	SCE-FA44	1
28	Exhaust Grill & Filter	Saginaw	SCE-FGA44	1
29	Vapor Capsule	Zerust	VC2-1	1

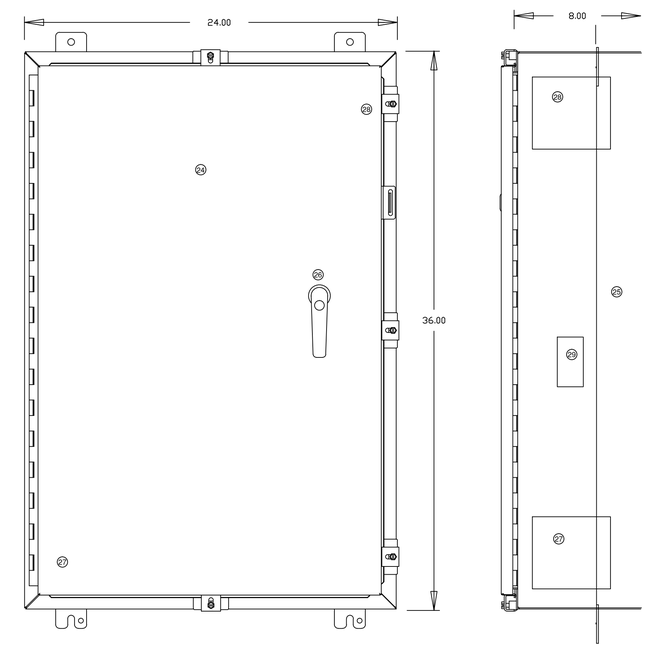

NO.	REVISIONS	DATE

DESIGN XXX
DRAWN XXX
DATE XXX

CITY OF CLERMONT
STANDARD DETAILS

CITY OF CLERMONT
685 WEST MONTROSE STREET
P.O. BOX 120219
CLERMONT, FLORIDA 34711
PHONE: (352) 241-7335

SIGNATURE AND SEAL

DRAWING FILE

DRAWING D9

SHEET OF

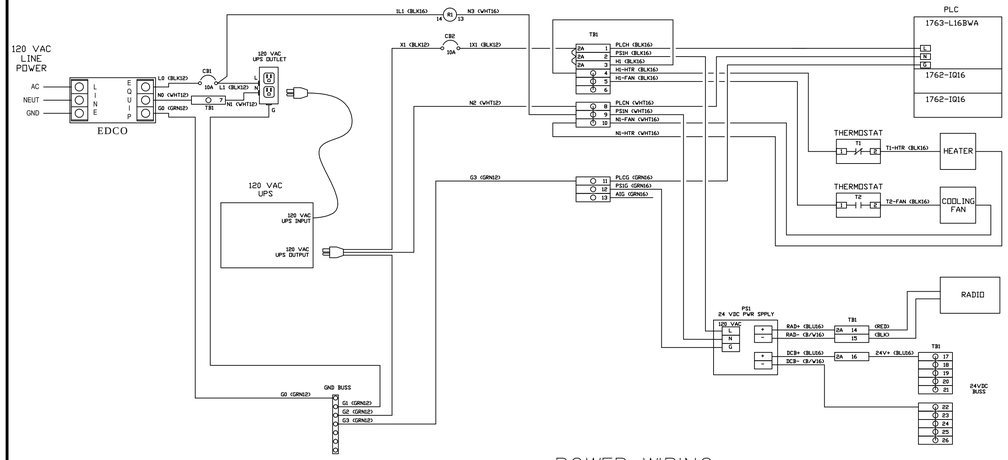

POWER WIRING

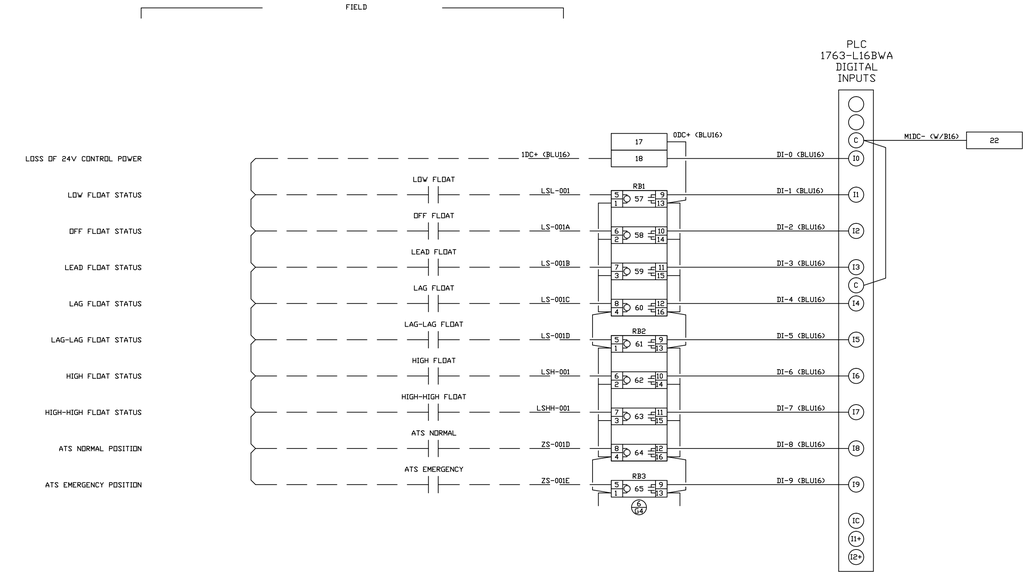

DI WIRING 1

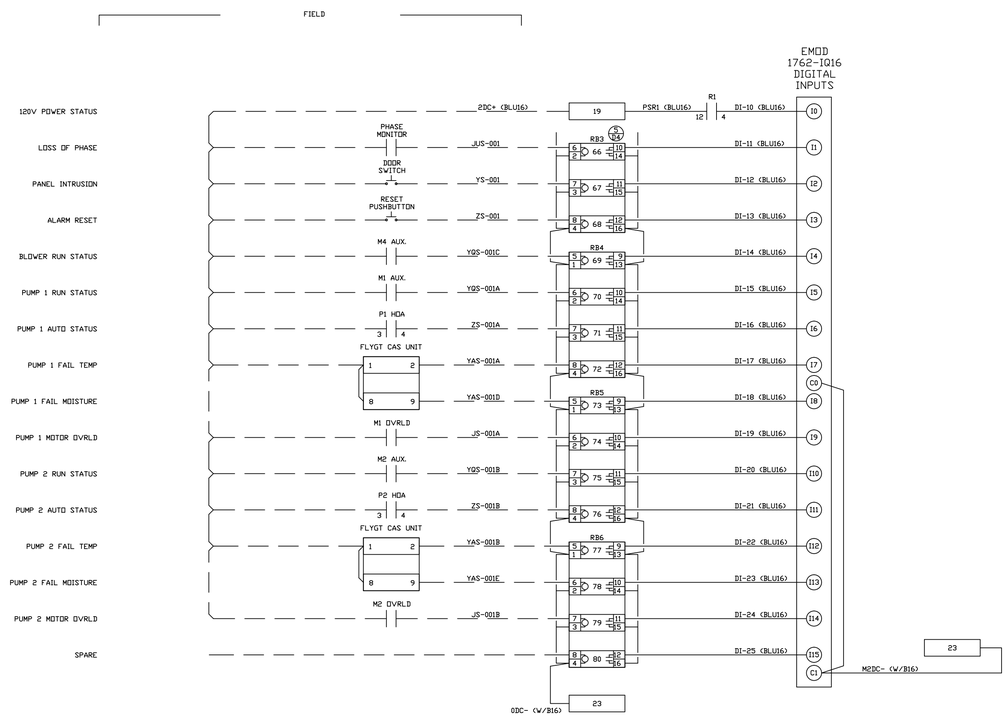

DI WIRING 2

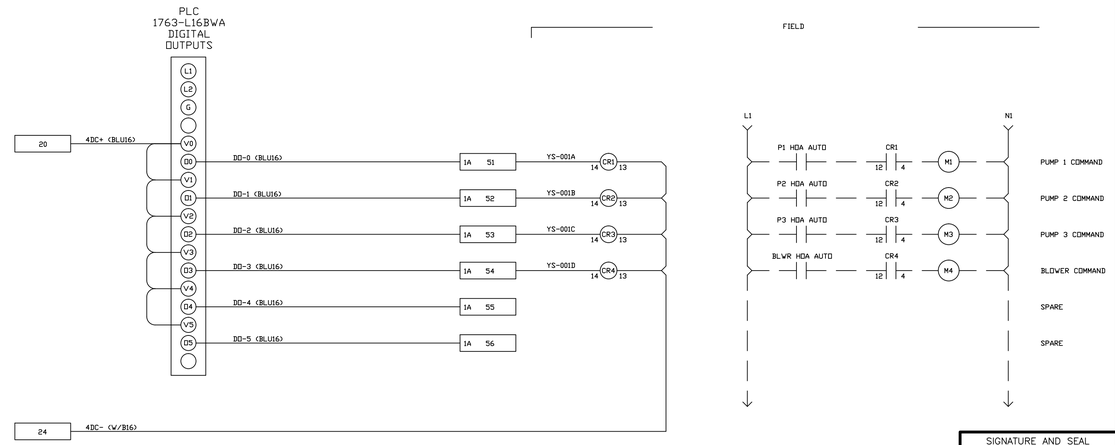

DO WIRING

NO.	REVISIONS	DATE

DESIGN	DRAWN	DATE
XXX	XXX	XXX

CITY OF CLERMONT STANDARD DETAILS

CITY OF CLERMONT
685 WEST MONTROSE STREET
P.O. BOX 120219
CLERMONT, FLORIDA 34711
PHONE: (352) 241-7335

SIGNATURE AND SEAL

DRAWING FILE

DRAWING

D10

SHEET OF

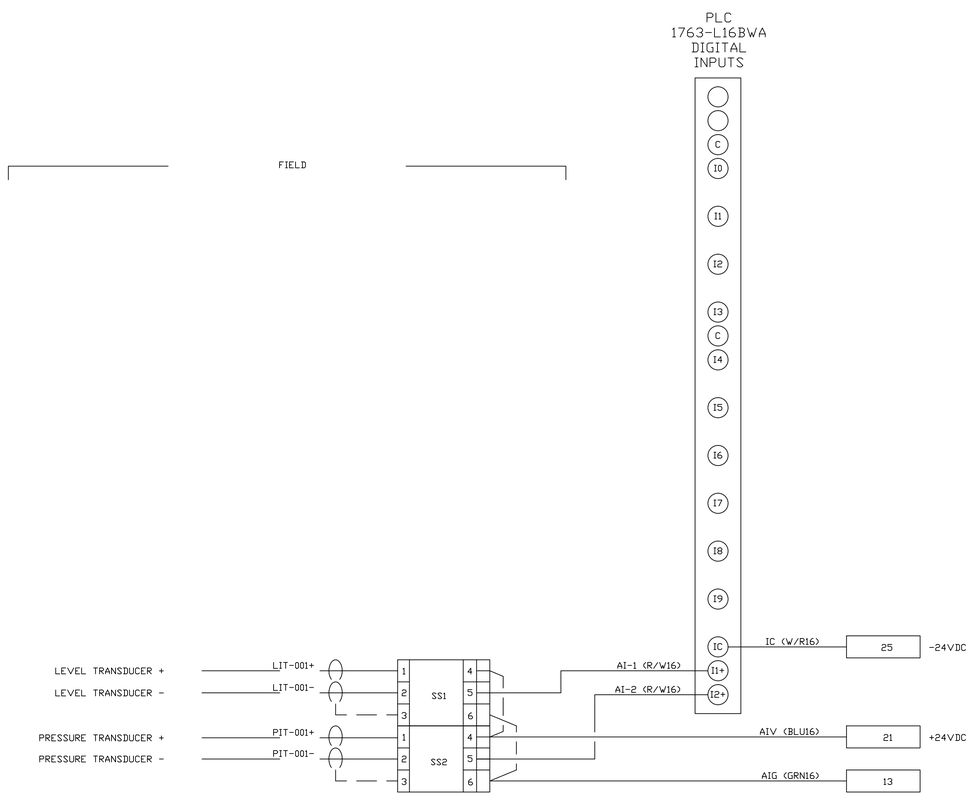

AI WIRING

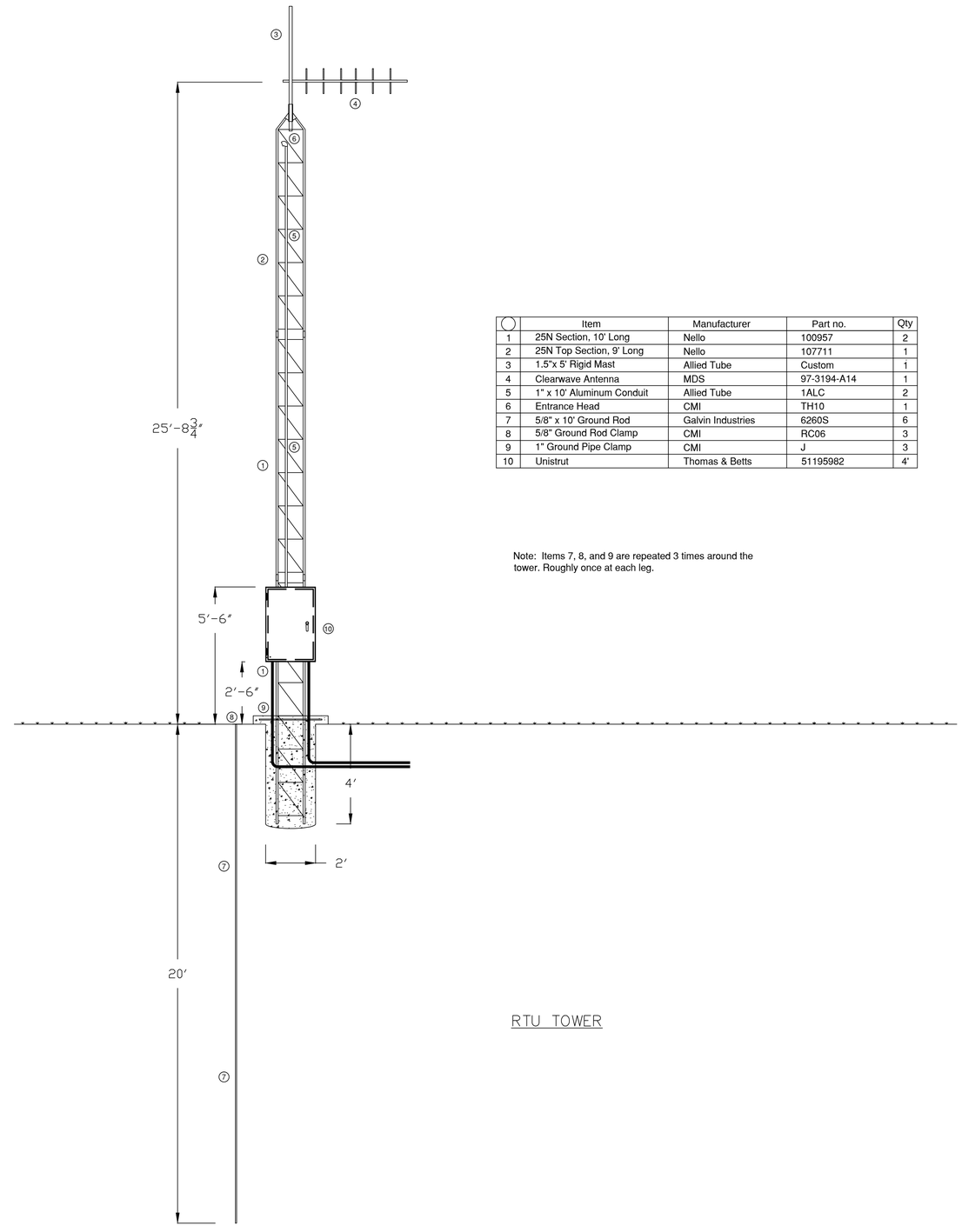

RTU TOWER

	Item	Manufacturer	Part no.	Qty
1	25N Section, 10' Long	Nello	100957	2
2	25N Top Section, 9' Long	Nello	107711	1
3	1.5"x 5' Rigid Mast	Allied Tube	Custom	1
4	Clearwave Antenna	MDS	97-3194-A14	1
5	1" x 10' Aluminum Conduit	Allied Tube	1ALC	2
6	Entrance Head	CMI	TH10	1
7	5/8" x 10' Ground Rod	Galvin Industries	6260S	6
8	5/8" Ground Rod Clamp	CMI	RC06	3
9	1" Ground Pipe Clamp	CMI	J	3
10	Unistrut	Thomas & Betts	51195982	4'

Note: Items 7, 8, and 9 are repeated 3 times around the tower. Roughly once at each leg.

NO.	REVISIONS	DATE

DESIGN XXX
DRAWN XXX
DATE XXX

CITY OF CLERMONT
STANDARD DETAILS

CITY OF CLERMONT
685 WEST MONTROSE STREET
P.O. BOX 120219
CLERMONT, FLORIDA 34711
PHONE: (352) 241-7335

SIGNATURE AND SEAL

DRAWING FILE

DRAWING D11

SHEET OF

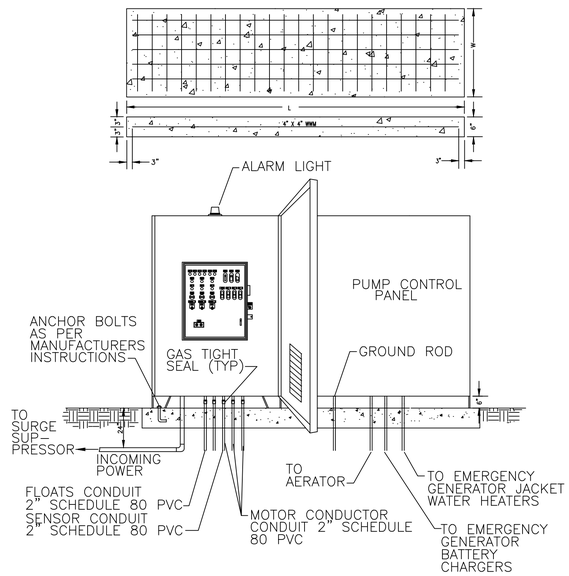

NOTES:

1. SEE CONTROL PANEL MANUFACTURER FOR DIMENSIONS OF CONTROL PANEL BOX.
2. DIMENSION OF CONTROL PANEL SLAB AS PER CONTROL MANUFACTURER.
3. CONCRETE SHALL HAVE A 28 DAY COMPRESSIVE STRENGTH OF 3000 PSI.
4. SEE GENERATOR RISER DIAGRAMS FOR CONDUIT SPECIFICATIONS.

CONTROL PANEL DETAIL

NOT TO SCALE

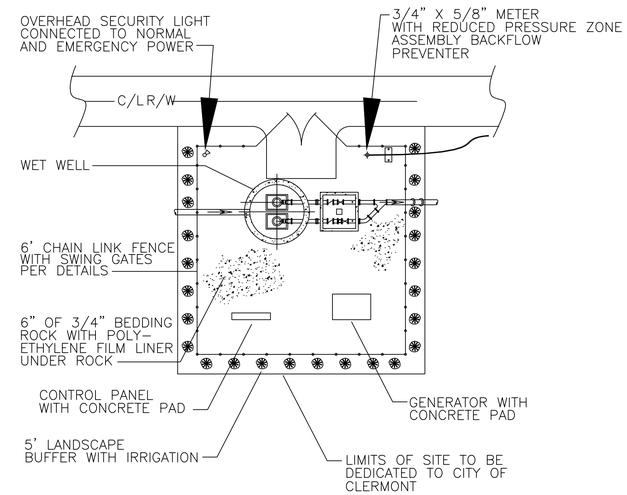

LIFT STATION SITE PLAN

NOT TO SCALE

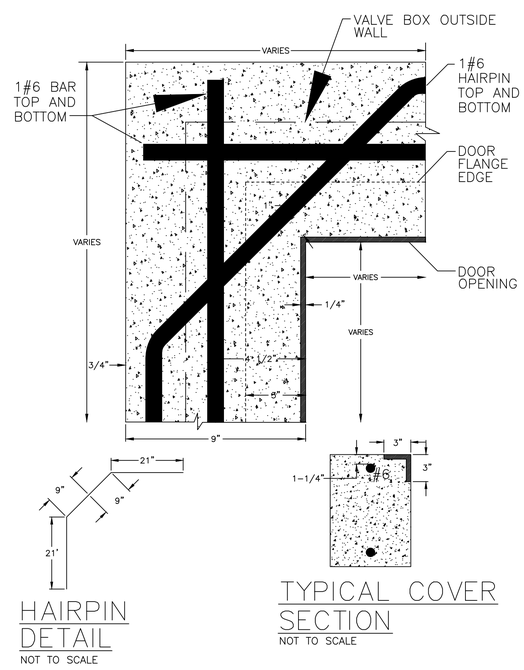

HAIRPIN DETAIL

NOT TO SCALE

TYPICAL COVER SECTION

NOT TO SCALE

VALVE BOX COVER DETAIL

NOT TO SCALE

NO.	REVISIONS	DATE

DESIGN XXX
DRAWN XXX
DATE XXX

CITY OF CLERMONT
STANDARD DETAILS

CITY OF CLERMONT
685 WEST MONTROSE STREET
P.O. BOX 120219
CLERMONT, FLORIDA 34711
PHONE: (352) 241-7335

SIGNATURE AND SEAL

DRAWING FILE

DRAWING D12

SHEET OF

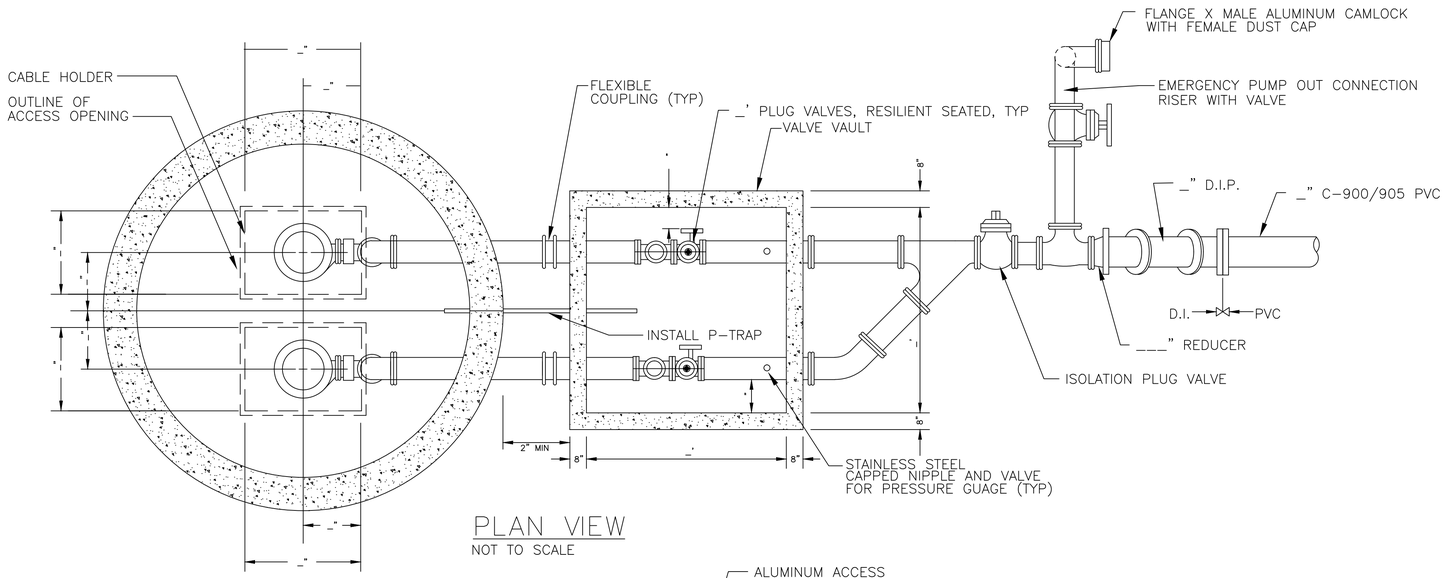

PLAN VIEW
NOT TO SCALE

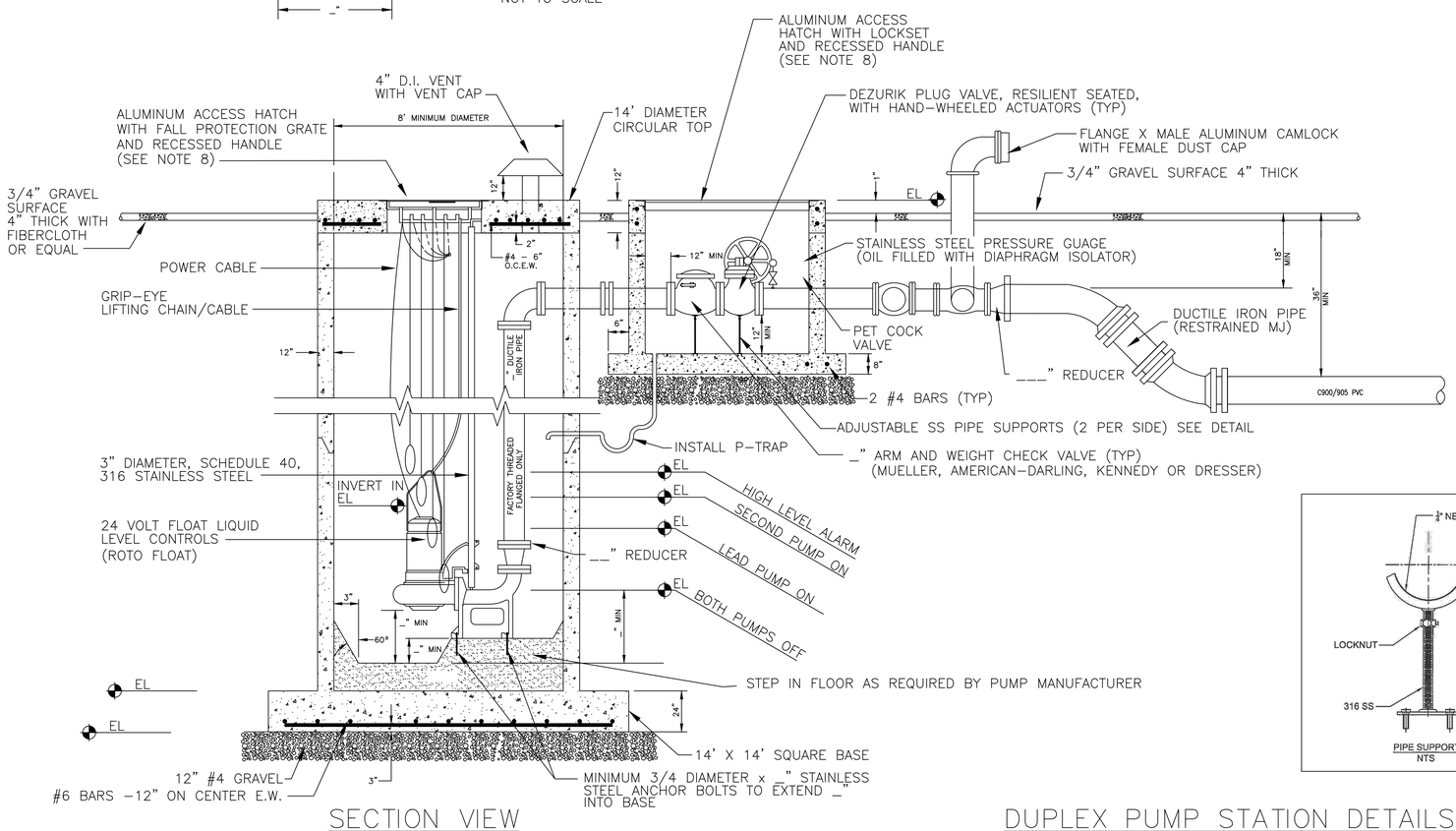

SECTION VIEW
NOT TO SCALE

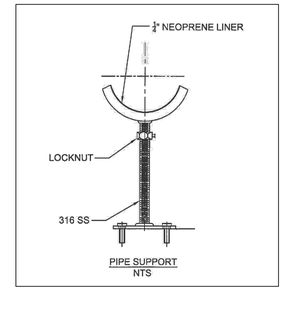

PIPE SUPPORT
NTS

DUPLEX PUMP STATION DETAILS
NOT TO SCALE

GENERAL NOTES:

1. WET WELLS SHALL BE CONSTRUCTED WITH A HIGH DENSITY POLYETHYLENE LINER OR FIBERGLASS LINER CAST IN DURING CONSTRUCTION. THIS LINER SHALL BE AGRU SUREGRIP HDPE LINER, OR GU FIBERGLASS LINER, OR EQUAL.
2. BASE AND FIRST RISER UNIT TO BE CAST MONOLITHIC.
3. VALVE VAULT SHALL BE SIZED TO PERMIT EASY REMOVAL OF CHECK VALVE SPINDLES WITH MINIMUM CLEARANCES AS SHOWN FOR 6" DIAMETER PIPE AND SMALLER. CLEARANCES SHALL INCREASE AS REQUIRED FOR LARGER PIPE SIZES.
4. 3" P-TRAP SHALL BE INSTALLED FROM VALVE BOX TO WET WELL.
5. VALVE VAULT DOORS SHALL BE SIZED AND INSTALLED TO PERMIT EASY REMOVAL OF VALVES, TO PERMIT ACCESS AND VISIBILITY OF PRESSURE GUAGES AND TO PERMIT EASY ACCESS TO VALVE ACTUATORS.
6. ALL LOCATIONS WHERE PIPES ENTER OR LEAVE THE WET WELL OR VALVE VAULT SHALL BE MADE WATERTIGHT WITH WALL SLEEVE OR NON-SHRINK GROUT.
7. THERE SHALL BE NO VALVES OR ELECTRICAL JUNCTION BOXES IN WET WELL.
8. WET WELL AND VALVE VAULT COVERS SHALL BE ALUMINUM WITH 316 S.S. HARDWARE AND LOCK BRACKET. SIZE AS REQUIRED BY PUMP MANUFACTURER AND APPROVED BY THE CITY OF CLERMONT. COVERS SHALL BE INSTALLED BY THE CONTRACTOR. WET WELL HATCHES TO HAVE FALL PROTECTION GRATES UNDER DOORS.
9. RESTRAINED FLEXIBLE COUPLINGS SHALL BE SLEEVE TYPE.
10. PUMPS SHALL BE:
    MANUFACTURER: _____; MODEL: _____; IMP: _____;
    SPEED: _____ RPM; DISCHARGE SIZE: _____ IN.;
    VOLTAGE: _____: HZ.: ___60____; PHASE: _____3____;
    H.P.:_____ MIN. SOLID SIZE: ____3_____ IN.;
11. OPERATING CONDITIONS SHALL BE _____ GPM AT _____ FEET TDH. (ULTIMATE)
12. ALL HARDWARE IN WET WELL AND VALVE BOX TO BE 316 STAINLESS STEEL.
13. THE LIFT STATION AND FORCE MAIN CONSTRUCTION SHALL MEET THE CITY OF CLERMONT STANDARDS AND SPECIFICATIONS.
14. ALL PUMP ACCESSORIES AND ELECTRICAL COMPONENTS SHALL BE INSTALLED BY THE CONTRACTOR. PUMPS WILL BE INSTALLED BY THE CONTRACTOR UNLOADING OF ALL EQUIPMENT WILL BE THE RESPONSIBILITY OF THE CONTRACTOR.
15. ELECTRICAL POWER SUPPLY MUST BE ARRANGED FOR INSTALLATION BY THE CONTRACTOR. POWER SHALL BE SUPPLIED BY UNDERGROUND WIRE TO THE LIFT STATION PANEL METER.
16. PRECAST CONCRETE WET WELL OR 12' DIA. REINFORCED CONCRETE PIPE, CLASS III; EITHER TO HAVE 4000 P.S.I. TYPE II CONCRETE. JOINTS TO BE "O" RING, BITUMINOUS PLASTIC CEMENT OF PREFORMED PLASTIC JOINT SEALING COMPOUND.
17. PUMPS COMPLETE WITH CHAIN HOOKS, 3" GUIDE RAIL SYSTEM, CABLE HOLDERS AND 4 BULB MERCURY FLOAT SYSTEM, SHALL BE INSTALLED BY THE CONTRACTOR.
18. FIELD PAINTING: ALL STEEL OR METAL SURFACES INCLUDING PIPE, FITTINGS AND EQUIPMENT FURNISHED BY OWNER. CLEAN SURFACES JUST PRIOR TO PAINTING. DIRT AND DUST SHALL BE BRUSHED OFF, GREASE WASHED AWAY BY USE OF AN APPROVED THINNER, OTHER CONTAMINANTS REMOVED EFFECTIVELY, AND UNPAINTED AND ABRADED AREAS WIRE BRUSHED TO REMOVE RUST AND THE OXIDES WHICH WILL HAVE FORMED. THE EXPOSED SURFACES SHALL THEN RECEIVE TWO (2) COATS OF ALKYD FINISH PAINT. THE FINISH COATS SHALL BE APPLIED AT THE DRY FILM THICKNESS AS RECOMMENDED BY THE MANUFACTURER. THE FIRST COAT SHALL BE TINTED WITH A SMALL AMOUNT OF CARBON BLACK TO INSURE FULL COVERAGE WITH THE SECOND COAT.
19. CONTRACTOR SHALL COORDINATE WITH PUMP MANUFACTURER DIRECTLY TO DETERMINE ANCHOR BOLT SPACING AND CLEARANCE DIMENSIONS.
20. COORDINATE WITH PUMP MANUFACTURER FOR ALL INSTALLATION INSTRUCTIONS.
21. PROVIDE IMPELLER PULLER TOOL AND REBUILD KIT.
22. PROVIDE WET WELL HATCH OPENINGS WITH PROTECTIVE GRATING PANEL.
23. ALL LIFT STATION SUBMITTALS SHALL BE APPROVED BY CITY OF CLERMONT ENGINEER PRIOR TO CONSTRUCTION. (3) COPIES TO BE PROVIDED.

NO.	REVISIONS	DATE

DESIGN XXX
DRAWN XXX
DATE XXX

CITY OF CLERMONT
STANDARD DETAILS

CITY OF CLERMONT
685 WEST MONTROSE STREET
P.O. BOX 120219
CLERMONT, FLORIDA 34711
PHONE: (352) 241-7335

SIGNATURE AND SEAL

DRAWING FILE

DRAWING
D13

SHEET OF

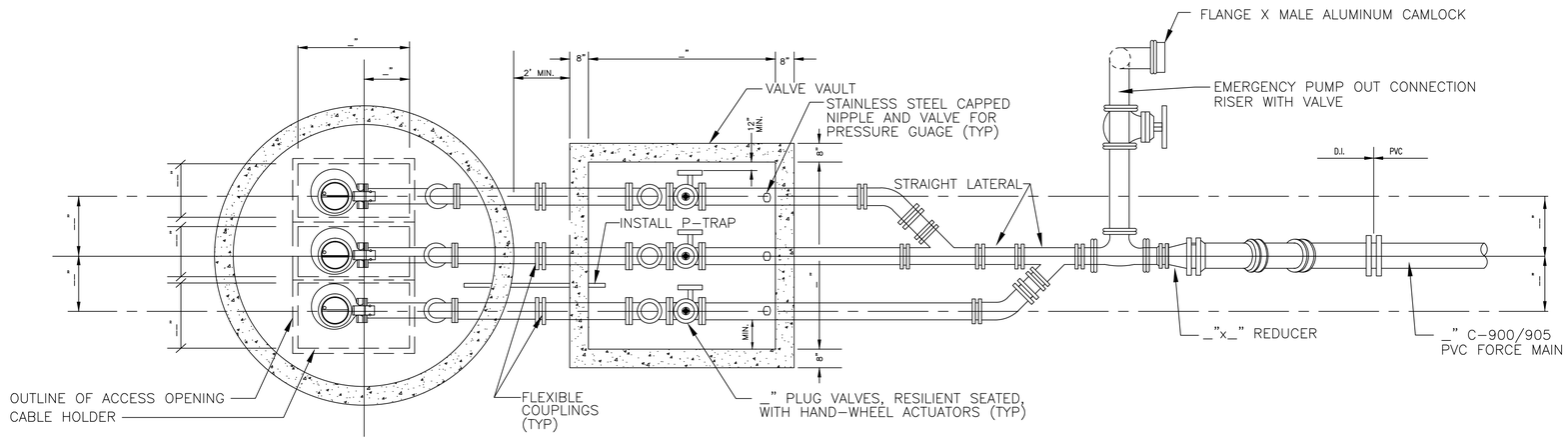

PLAN VIEW

NOT TO SCALE

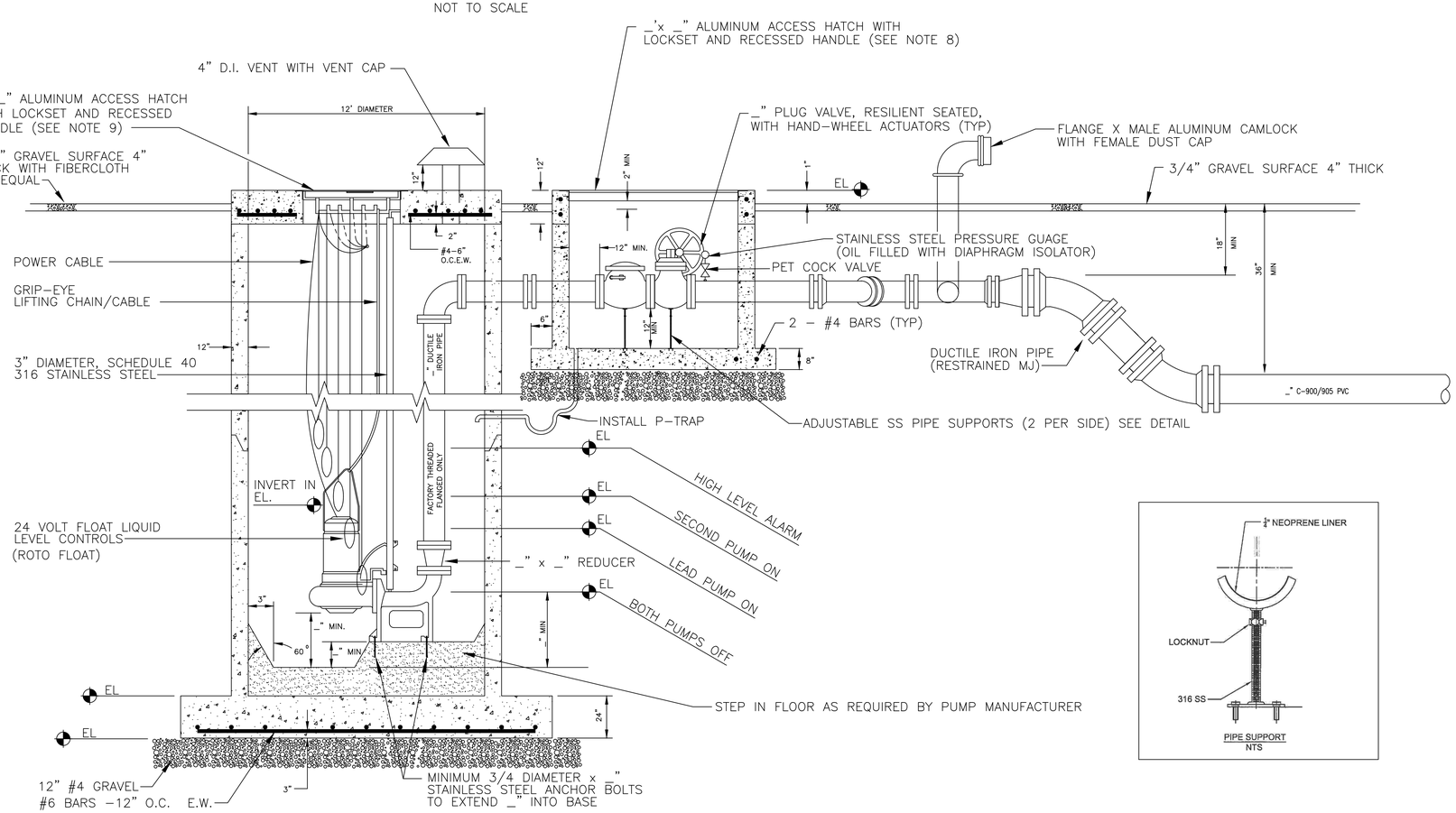

SECTION VIEW

NOT TO SCALE

PIPE SUPPORT
NTS

TRIPLEX PUMP STATION DETAILS

NOT TO SCALE

GENERAL NOTES:

1. WET WELLS SHALL BE CONSTRUCTED WITH A HIGH DENSITY POLYETHYLENE LINER OR FIBERGLASS LINER CAST IN DURING CONSTRUCTION. THIS LINER SHALL BE AGRU SUREGRIP HDPE LINER, OR GU FIBERGLASS LINER, OR EQUAL.
2. BASE AND FIRST RISER UNIT TO BE CAST MONOLITHIC.
3. VALVE VAULT SHALL BE SIZED TO PERMIT EASY REMOVAL OF CHECK VALVE SPINDLES WITH MINIMUM CLEARANCES AS SHOWN FOR 6" DIAMETER PIPE AND SMALLER. CLEARANCES SHALL INCREASE AS REQUIRED FOR LARGER PIPE SIZES.
4. 3" P-TRAP SHALL BE INSTALLED FROM VALVE BOX TO WET WELL.
5. VALVE VAULT DOORS SHALL BE SIZED AND INSTALLED TO PERMIT EASY REMOVAL OF VALVES, TO PERMIT ACCESS AND VISIBILITY OF PRESSURE GUAGES AND TO PERMIT EASY ACCESS TO VALVE ACTUATORS.
6. ALL LOCATIONS WHERE PIPES ENTER OR LEAVE THE WET WELL OR VALVE VAULT SHALL BE MADE WATERTIGHT WITH WALL SLEEVE OR NON-SHRINK GROUT.
7. THERE SHALL BE NO VALVES OR ELECTRICAL JUNCTION BOXES IN WET WELL.
8. WET WELL AND VALVE VAULT COVERS SHALL BE ALUMINUM WITH 316 S.S. HARDWARE AND LOCK BRACKET. SIZE AS REQUIRED BY PUMP MANUFACTURER AND APPROVED BY THE CITY OF CLERMONT. COVERS SHALL BE INSTALLED BY THE CONTRACTOR. WET WELL HATCHES TO HAVE FALL PROTECTION GRATES UNDER DOORS.
9. RESTRAINED FLEXIBLE COUPLINGS SHALL BE SLEEVE TYPE.
10. PUMPS SHALL BE:
    MANUFACTURER: _____; MODEL: _____; IMP: _____;
    SPEED: _____ RPM; DISCHARGE SIZE: _____ IN.;
    VOLTAGE: _____: HZ.: ___60___; PHASE: _____3_____;
    H.P.:_____ MIN. SOLID SIZE: ____3_____ IN.;
11. OPERATING CONDITIONS SHALL BE _____ GPM AT _____ FEET TDH. (ULTIMATE)
12. ALL HARDWARE IN WET WELL AND VALVE BOX TO BE 316 STAINLESS STEEL.
13. THE LIFT STATION AND FORCE MAIN CONSTRUCTION SHALL MEET THE CITY OF CLERMONT STANDARDS AND SPECIFICATIONS.
14. ALL PUMP ACCESSORIES AND ELECTRICAL COMPONENTS SHALL BE INSTALLED BY THE CONTRACTOR. PUMPS WILL BE INSTALLED BY THE CONTRACTOR UNLOADING OF ALL EQUIPMENT WILL BE THE RESPONSIBILITY OF THE CONTRACTOR.
15. ELECTRICAL POWER SUPPLY MUST BE ARRANGED FOR INSTALLATION BY THE CONTRACTOR. POWER SHALL BE SUPPLIED BY UNDERGROUND WIRE TO THE LIFT STATION PANEL METER.
16. PRECAST CONCRETE WET WELL OR 12' DIA. REINFORCED CONCRETE PIPE, CLASS III; EITHER TO HAVE 4000 P.S.I. TYPE II CONCRETE. JOINTS TO BE "O" RING, BITUMINOUS PLASTIC CEMENT OF PREFORMED PLASTIC JOINT SEALING COMPOUND.
17. PUMPS COMPLETE WITH CHAIN HOOKS, 3" GUIDE RAIL SYSTEM, CABLE HOLDERS AND 4 BULB MERCURY FLOAT SYSTEM, SHALL BE INSTALLED BY THE CONTRACTOR.
18. FIELD PAINTING: ALL STEEL OR METAL SURFACES INCLUDING PIPE, FITTINGS AND EQUIPMENT FURNISHED BY OWNER. CLEAN SURFACES JUST PRIOR TO PAINTING. DIRT AND DUST SHALL BE BRUSHED OFF, GREASE WASHED AWAY BY USE OF AN APPROVED THINNER, OTHER CONTAMINANTS REMOVED EFFECTIVELY, AND UNPAINTED AND ABRADED AREAS WIRE BRUSHED TO REMOVE RUST AND THE OXIDES WHICH WILL HAVE FORMED. THE EXPOSED SURFACES SHALL THEN RECEIVE TWO (2) COATS OF ALKYD FINISH PAINT. THE FINISH COATS SHALL BE APPLIED AT THE DRY FILM THICKNESS AS RECOMMENDED BY THE MANUFACTURER. THE FIRST COAT SHALL BE TINTED WITH A SMALL AMOUNT OF CARBON BLACK TO INSURE FULL COVERAGE WITH THE SECOND COAT.
19. CONTRACTOR SHALL COORDINATE WITH PUMP MANUFACTURER DIRECTLY TO DETERMINE ANCHOR BOLT SPACING AND CLEARANCE DIMENSIONS.
20. COORDINATE WITH PUMP MANUFACTURER FOR ALL INSTALLATION INSTRUCTIONS.
21. PROVIDE IMPELLER PULLER TOOL AND REBUILD KIT.
22. PROVIDE WET WELL HATCH OPENINGS WITH PROTECTIVE GRATING PANEL.
23. ALL LIFT STATION SUBMITTALS SHALL BE APPROVED BY CITY OF CLERMONT ENGINEER PRIOR TO CONSTRUCTION. (3) COPIES TO BE PROVIDED.

NO.	REVISIONS	DATE

DESIGN XXX
DRAWN XXX
DATE XXX

CITY OF CLERMONT
STANDARD DETAILS

CITY OF CLERMONT
685 WEST MONTROSE STREET
P.O. BOX 120219
CLERMONT, FLORIDA 34711
PHONE: (352) 241-7335

SIGNATURE AND SEAL

DRAWING FILE

DRAWING D14

SHEET OF

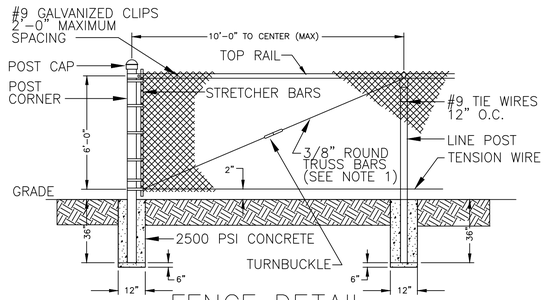

FENCE DETAIL

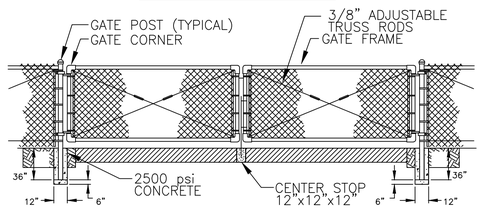

DOUBLE SWING GATE DETAIL

NOTES:

1. TRUSS BARS ARE REQUIRED FOR EACH GATE SECTION AND THE FIRST SPAN ON EACH SIDE OF A CORNER POST ONLY.

CHAIN LINK FENCE DETAIL

NOT TO SCALE

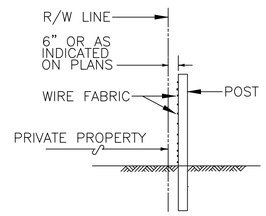

FENCE POSITION AT LOCATIONS WITHOUT FRONTAGE ROADS

(REFER TO DETAIL PLANS FOR FENCE POSITION AT LOCATIONS WITH FRONTAGE ROADS)

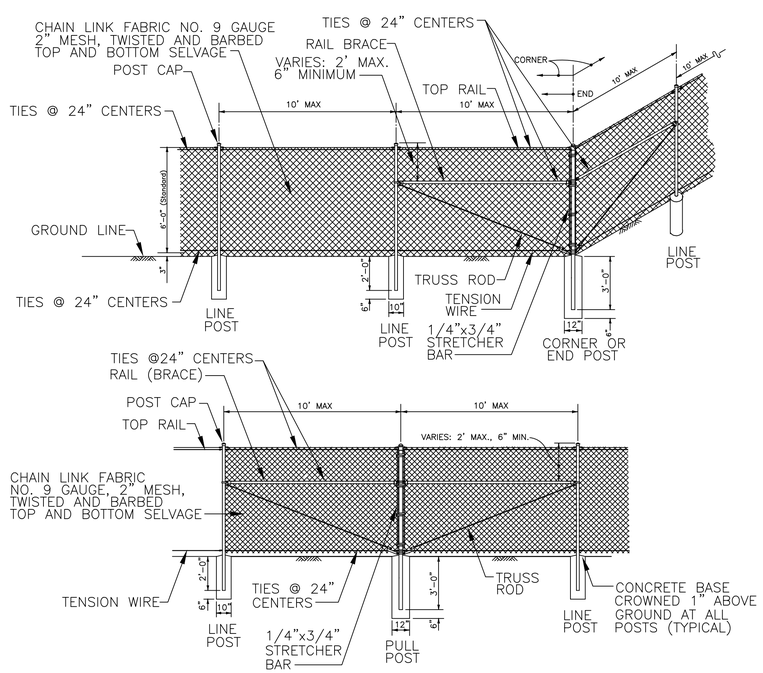

TUBULAR POST ILLUSTRATED

NOT TO SCALE

GENERAL NOTES:

1. THIS FENCE TO BE USED GENERALLY IN URBAN AREAS.

2. FOR SUPPLEMENTAL INFORMATION REFER TO SECTIONS 550 AND 996 OF FDOT STANDARD SPECIFICATIONS.

3. CHAIN LINK FABRIC, POSTS, RAILS, TRUSS RODS, TENSION WIRES, TIE WIRES, STRETCHER BARS, GATES AND ALL MISCELLANEOUS FITTINGS AND HARDWARE SHALL MEET THE REQUIREMENTS OF AASHTO AND ASTM M181 UNLESS OTHERWISE SPECIFIED BY THIS INDEX. STIPULATED AASHTO AND ASTM SIGNIFY CURRENT REFERENCE.

4. FENCE COMPONENT OPTIONS:
   A. LINE POST OPTIONS:
      (1) GALVANIZED STEEL PIPE, SCHEDULE 40– 1–1/2" NOMINAL DIAMETER GALVANIZED AT THE RATE OF 1.8 oz/sf: ASTM A53 TABLE X2, ASTM F1083, AND AASHTO M111.
      (2) ALUMINUM COATED STEEL PIPE – 1–1/2" NOMINAL DIAMETER COATED AT THE RATE OF 0.40 oz/sf: SPEC SUBARTICLE 966–1.5.
      (3) ALUMINUM ALLOY PIPE – 2" NOMINAL DIAMETER: ASTM B241 OR B21, ALLOY 6063, T6.
      (4) STEEL H–BEAM – 1–7/8"x1–5/8": GALVANIZED 1.8 oz/sf: AASHTO M111 AND DETAIL.
      (5) ALUMINUM ALLOY H–BEAM – 1–7/8"x1–5/8": DETAIL.
      (6) STEEL C – 1–7/8"x1–5/8": GALVANIZED 1.8 oz/sf ZINC: AASHTO M111 OR 0.9 oz/sf ZINC – 5% ALUMINUM MISCHMETAL: ASTM F1234 AND DETAIL.
      (7) RESISTANCE WELDED STEEL PIPE – 1–1/2" NOMINAL DIAMETER: ASTM F669 LIGHT INDUSTRIAL FENCE AND COATINGS FOR GROUP 1C MATERIALS: ASTM F1234.
   B. CORNER, END AND PULL POST OPTIONS:
      (1) GALVANIZED STEEL PIPE, SCHEDULE 40 – 2" NOMINAL DIAMETER GALVANIZED AT THE RATE OF 1.8 oz/sf: ASTM A53 TABLE X2, ASTM F1083, AND AASHTO M111.
      (2) ALUMINUM COATED STEEL PIPE – 2" NOMINAL DIAMETER COATED AT THE RATE OF 0.40 oz/sf: SPEC SUBARTICLE 966–1.5.
      (3) ALUMINUM ALLOY PIPE – 2–1/2" NOMINAL DIAMETER: ASTM B241 OR B221, ALLOY 6063, T6.
      (4) RESISTANCE WELDED STEEL PIPE – 2" NOMINAL DIAMETER: ASTM F669 LIGHT INDUSTRIAL FENCE AND COATINGS FOR GROUP 1C MATERIALS: ASTM F1234.
   C. RAIL OPTIONS:
      (1) GALVANIZED STEEL PIPE, SCHEDULE 40 – 1–1/4" NOMINAL DIAMETER GALVANIZED AT THE RATE OF 1.8 oz/sf: ASTM A53 TABLE X2, ASTM F1083, AND AASHTO M111.
      (2) ALUMINUM COATED STEEL PIPE – 1–1/4" NOMINAL DIAMETER COATED AT THE RATE OF 0.40 oz/sf: SPEC SUBARTICLE 966–1.5.
      (3) ALUMINUM ALLOY PIPE – 1–1/4" NOMINAL DIAMETER: ASTM B241 OR B221, ALLOY 6063, T6.
      (4) RESISTANCE WELDED STEEL PIPE – 1–1/4" NOMINAL DIAMETER: ASTM F669 LIGHT INDUSTRIAL FENCE AND COATINGS FOR GROUP 1C MATERIALS: ASTM F1234.
   D. CHAIN LINK FABRIC OPTIONS (2" MESH WITH TWISED AND BARBED SELVAGE TOP AND BOTTOM FOR ALL OPTIONS):
      (1) AASHTO M181 TYPE – ZINC COATED STEEL, NO. 9 GAUGE (COATED WIRE DIAMETER), GALVANIZED AT THE RATE OF 1.8 oz/sf (M181 CLASS D 2.0 oz/sf MODIFIED TO 1.8 oz/sf).
      (2) AASHTO M181 TYPE – ALUMINUM COATED STEEL, NO. 9 GAUGE (COATED WIRE DIAMETER), COATED AT THE RATE OF 0.40 oz/sf.
      (3) AASHTO M181 TYPE – POLYVINYL CHLORIDE (PVC) COATED STEEL, NO. 9 GAUGE (COATED CORE WIRE DIAMETER), CORE WIRE – ZINC COATED STEEL. PVC COATING: M181 CLASS A (EITHER EXTRUDED OR EXTRUDED AND BONDED) OR CLASS B (BONDED). SEE TABLE.
   E. TENSION WIRE OPTIONS:
      (1) NO. 7 GAUGE STEEL WIRE ZINC GALVANIZED AT THE RATE OF 1.8 oz/sf: AASHTO M181.
      (2) ALUMINUM ALLOY WIRE CONFORMING TO THE REQUIREMENTS OF ASTM B211, ALLOY 6061, TEMPER T89 OR T94, WITH A WIRE DIAMETER OF 0.1875" OR LARGER.
      (3) NO. 7 GUAGE ALUMINUM COATED STEEL WIRE COATED AT THE RATE OF 0.40 oz/sf: AASHTO M181.
   F. TIE WIRE AND HOG RING OPTIONS:
      (1) NO. 9 GAUGE STEEL WIRE GALVANIZED AT THE RATE OF 1.8 oz/sf.
      (2) ALUMINUM ALLOY WIRE CONFORMING TO THE REQUIREMENTS OF ASTM B211, ALLOY 6061, TEMPER T89 OR T94, WITH A WIRE DIAMETER OF 0.1443" OR LARGER.
      (3) NO. 7 GUAGE ALUMINUM COATED STEEL WIRE COATED AT THE RATE OF 0.40 oz/sf.

5. UNLESS A SPECIFIC MATERIAL IS CALLED FOR IN THE PLANS, THE CONTRACTOR MAY ELECT TO USE EITHER A SINGLE TYPE OF MATERIAL OR A COMBINATION OF MATERIAL TYPES FROM THE COMPONENT OPTIONS LISTED ABOVE. COMBINATIONS OF OPTIONAL MATERIALS ARE RESTRICTED AS FOLLOWS:

   A. ONLY ONE FABRIC OPTIONAL MATERIAL WILL BE PERMITTED BETWEEN CORNER AND/OR END POST ASSEMBLIES.

   B. ONLY ONE LINE POST OPTIONAL MATERIAL WILL BE PERMITTED BETWEEN CORNER AND/OR END POST ASSEMBLIES.

   C. PULL POST ASSEMBLIES SHALL BE OPTIONAL MATERIALS IDENTICAL TO EITHER THE LINE POST OPTIONAL MATERIAL OR THE CORNER END POST ASSEMBLY OPTIONAL MATERIAL, BUT PULL POST ASSEMBLIES SHALL BE THE SAME OPTIONAL MATERIAL BETWEEN ANY SET CORNER AND/OR END POST ASSEMBLIES.

6. CONCRETE FOR BASES SHALL BE CLASS AS SPECIFIED IN SECTION 345 OF THE STANDARD SPECIFICATIONS, EXCEPT THAT THE REQUIREMENTS CONTAINED IN 345–5.1, 345–10 AND 345–11 SHALL NOT APPLY. MATERIALS FOR CLASS CONCRETE MAY BE PROPORTIONED BY VOLUME AND/OR BY WEIGHT.

7. LINE POSTS ARE TO BE SET IN CONCRETE AS DETAILED ABOVE OR BY THE FOLLOWING METHODS:

   A. IN ACCORDANCE WITH SPECIAL DETAILS AND/OR AS SPECIFICALLY DESCRIBED IN THE CONTRACT PLANS AND SPECIFICATIONS.

   B. IN ACCORDANCE WITH ASTM F567 SUBSECTIONS 4.4 THROUGH 4.7, 4.9 AND 4.10 AS APPROVED BY THE ENGINEER.

   C. IN SOILS THAT ARE FIRM, WELL DRAINED, AND SUITABLE FOR FULL STABLE EMBEDMENT, ANY OF THE OPTIONAL STEEL POSTS MAY BE DRIVEN IN LOCATIONS APPROVED BY THE ENGINEER. DRIVING WILL NOT BE PERMITTED IN SANDY SOILS. DRIVEN POSTS SHALL BE SET TO A MINIMUM DEPTH OF 3' FOR FENCES UP THROUGH 6' IN HEIGHT, AND FOR EACH 1' OF FENCE HEIGHT ABOVE 6' THE POSTS SHALL BE SET AN ADDITIONAL 6" IN DEPTH. POSTS SHALL BE PROTECTED TO PREVENT DAMAGE FROM DRIVING. DAMAGED POSTS SHALL BE REPAIRED OR REMOVED AND REPLACED AS DIRECTED BY THE ENGINEER WITHOUT ADDITIONAL COST TO THE DEPARTMENT.

   D. POSTS MOUNTED ON CONCRETE STRUCTURE OR SOLID ROCK SHALL BE MOUNTED IN ACCORDANCE WITH THE BASE PLATE DETAIL "FENCE MOUNTING ON CONCRETE ENDWALLS AND RETAINING WALL", SHEET 2 OR BY EMBEDMENT IN ACCORDANCE WITH ASTM F567, SUBSECTION 4.5.

   END, PULL AND CORNER POST ASSEMBLIES SHALL BE SET IN CONCRETE AS DETAILED ABOVE FOR ALL SOIL CONDITIONS OTHER THAN SOLID ROCK. POSTS WITHIN ASSEMBLIES THAT ARE LOCATED ON CONCRETE STRUCTURES OR SOLID ROCK SHALL BE SET BY BASE PLATE OR BY EMBEDMENT AS PRESCRIBED UNDER (D) ABOVE FOR LINE POSTS. LINE AND ASSEMBLY POSTS SET IN CONCRETE BASES SHALL BE SET AN ADDITIONAL 3" IN DEPTH FOR EACH 1' OF FENCE HEIGHT GREATER THAN 6'.

8. PULL POSTS SHALL BE USED AT BREAKS IN VERTICAL GRADES OF 15' OR MORE, OR AT APPROXIMATELY 350' CENTERS, EXCEPT THAT THIS MAXIMUM INTERVAL MAY BE REDUCED BY THE ENGINEER ON CURVES WHERE THE DEGREE OF CURVATURE IS GREATER THAN 3'.

9. CORNER POSTS ARE TO BE INSTALLED AT ALL HORIZONTAL BREAKS IN FENCE AT 15' OR MORE, AND AS REQUIRED AT VERTICAL BREAKS OVER 15' AS DETERMINED BY THE ENGINEER.

10. WHEN FENCE HAS AN INSTALLED TOP OF FABRIC HEIGHT LESS THAN 6', KNUCKLED TOP AND BOTTOM SELVAGES SHALL BE USED UNLESS THE PLANS SPECIFICALLY IDENTIFY LOCATIONS FOR TWISTED SELVAGE FABRICS.

11. UNLESS SLIDING GATES OR SPECIAL GATES ARE CALLED FOR IN THE PLANS, ALL GATES SHALL BE CHAIN LINK SWING GATES MEETING THE MATERIAL REQUIREMENTS DESCRIBED ABOVE AS APPROVED BY THE ENGINEER. PAYMENT SHALL INCLUDE THE GATES, SINGLE OR DOUBLE, ALL NECESSARY HARDWARE FOR INSTALLATION AND ANY ADDITIONAL LENGTH AND/OR SIZE FOR POSTS AT THE OPENING. GATES SHALL BE PAID FOR UNDER THE CONTRACT UNIT PRICE FOR FENCE GATES, TYPE B, EACH.

12. LINE POSTS, TENSION WIRES, CHAIN LINK FABRIC, TIE WIRES, CLASS CONCRETE, AND ALL MISCELLANEOUS FITTINGS AND HARDWARE TO BE INCLUDED IN THE COST FOR FENCING TYPE B, LF. THE STANDARD 6' HIGH FENCE SHALL BE PAID FOR UNDER THE CONTRACT UNIT PRICE FOR FENCING, TYPE B, LF. FENCE HAVING OTHER HEIGHT, LINE COMPONENTS AND/OR BARBED WIRE ATTACHMENTS, SHALL BE PAID FOR UNDER THE CONTRACT UNIT PRICE FOR FENCING TYPE B.

    CORNER POST ASSEMBLIES SHALL CONSIST OF ONE CORNER POST, TWO BRACES, TWO TRUSS RODS AND ALL NECESSARY FITTINGS AND HARDWARE AS DETAILED ABOVE, AND SHALL BE PAID FOR UNDER THE CONTRACT UNIT PRICE FOR CORNER POST ASSEMBLY (TYPE B FENCE), EACH.

    PULL POST ASSEMBLIES SHALL CONSIST OF ONE PULL POST, TWO BRACES, TWO TRUSS RODS AND ALL NECESSARY FITTING AND HARDWARE AS DETAILED ABOVE, AND SHALL BE PAID FOR UNDER THE CONTRACT UNIT PRICE FOR PULL POST ASSEMBLY (TYPE B FENCE), EACH.

    END POST ASSEMBLIES SHALL CONSIST OF ONE END POST, ONE BRACE, ONE TRUSS ROD, AND ALL NECESSARY FITTINGS AND HARDWARE AS DETAILED ABOVE, AND SHALL BE PAID FOR UNDER THE CONTRACT UNIT PRICE FOR END POST ASSEMBLY (TYPE B FENCE), EACH.

TYPE ~< VINYL COATED FABRIC								
SPECIFICATION SECTION 966 AND AASHTO M181 TABLE 4 REDEFINED AS FOLLOWS								
SPECIFIED DIAMETER OF METALIC COATED CORE WIRE			MINIMUM WEIGHT OF ZINC COATING		PVC THICKNESS RANGE			
					M181 CLASS A (EXTRUDED OR EXTRUDED AND BONDED COATING)		M181 CLASS B (BONDED COATING)	
INCHES	MM	GAUGE	OZ/FT^2	G/M^2	INCHES	MM	INCHES	MM
0.148	3.76	9	0.30	92	0.015 to 0.025	0.38 to 0.64	0.006 to 0.010	0.15 to 0.25

NO.	REVISIONS	DATE

DESIGN XXX
DRAWN XXX
DATE XXX

CITY OF CLERMONT
STANDARD DETAILS

CITY OF CLERMONT
685 WEST MONTROSE STREET
P.O. BOX 120219
CLERMONT, FLORIDA 34711
PHONE: (352) 241–7335

SIGNATURE AND SEAL

DRAWING FILE

DRAWING D15

SHEET OF

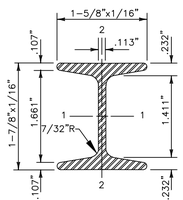

1-7/8"x 1-5/8" H-BEAM (STEEL) (ALUM)

AREA = 724 SQ. IN.

GALVANIZED WT/FT. =	2.72#	0.91#
	AXES	AXES
	1-1 2-2	1-1 2-2
MOMENT OF INERTIA	.428 .101	.428 .101
SECTION MODULUS	.456 .124	.456 .124
RAD. OF GYRATION	.779 .373	.779 .373
SURFACE AREA	.776 SF/FT	.776 SF/FT
TENSILE STRENGTH PSI	80,000	30,000
YIELDING POINT PSI (MIN)	48,000	25,000

OPTIONAL H-BEAM LINE POST FOR TYPE B FENCE

NOT TO SCALE

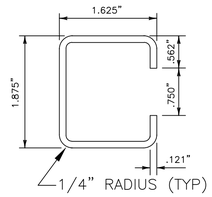

GALVANIZED WEIGHT/FT. = 2.34#
YIELD PSI (MIN) 45,000

STANDARD WALL

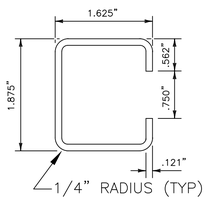

GALVANIZED WEIGHT/FT. = 1.85#
YIELD PSI (MIN) 45,000

THIN WALL

OPTIONAL "C" LINE POST FOR TYPE B FENCE

NOT TO SCALE

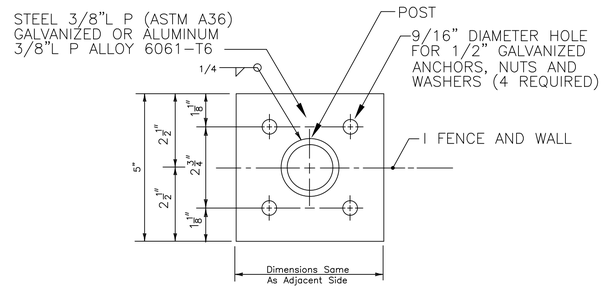

TOP VIEW FOUR ANCHOR OPTION

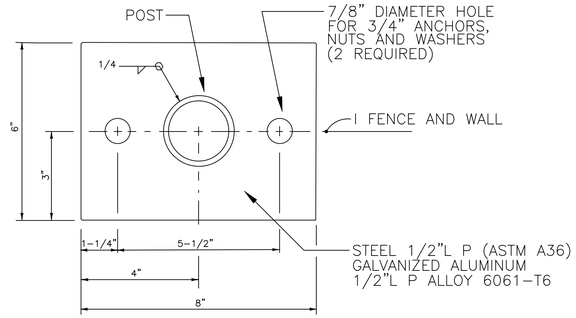

TOP VIEW TWO ANCHOR OPTION

BASE PLATE AND ANCHOR NOTES:

1. BASE PLATE IDENTICAL FOR LINE, PULL, END AND CORNER POSTS AND SHALL BE CONSIDERED AN INTEGRAL PART OF THE RESPECTIVE POSTS FOR BASIS OF PAYMENT.
2. POST TO BE PLUMBED BY GROUT SHIM UNDER BASE PLATE.
3. ANCHORS (GALVANIZED STEEL):
   12" CAST IN PLACE, 10-1/2" EMBEDMENT:
   HEADED BOLTS, U-BOLTS OR CLUSTER PLATES.
   8" ADHESIVE ANCHORS, 6" MINIMUM EMBEDMENT.*
   * ADHESIVE ANCHORS SHALL BE HEADLESS ANCHOR BOLTS SET IN DRILLED HOLES WITH EPOXY BONDING COMPOUND TYPE J (CLASS ~<) IN ACCORDANCE WITH THE MANUFACTURER'S SPECIFICATIONS; DRILLED HOLES SHALL BE 1/8" LARGER IN DIAMETERTHAN THE ANCHOR BOLT. EXPANSION BOLTS NOT PERMITTED.

NOTE: NO BARBED WIRE TO BE USED INSIDE CITY LIMITS.

FENCE MOUNTING ON CONCRETE ENDWALL AND RETAINING WALLS

NOT TO SCALE

NO.	REVISIONS	DATE

DESIGN XXX
DRAWN XXX
DATE XXX

CITY OF CLERMONT
STANDARD DETAILS

CITY OF CLERMONT
685 WEST MONTROSE STREET
P.O. BOX 120219
CLERMONT, FLORIDA 34711
PHONE: (352) 241-7335

SIGNATURE AND SEAL

DRAWING FILE

DRAWING D16

SHEET OF